LENDI INSTITUTE OF ENGINEERING AND TECHNOLOGY
(Approved by A.I.C.T.E & Affiliated to JNTU,Kakinada)
Jonnada (Village), Denkada (Mandal), VizianagaramDist – 535 005
Phone No. 08922-241111, 241112
E-Mail: lendi_2008@yahoo.com Website: www.lendi.org

Department of Electrical and Electronics Engineering

LAB MANUAL

Name of the Faculty : Mrs. K. ANITHA, Mrs. P. JANAKI, Mr. CH.S.V. PRAKASH

Name of the laboratory : ELECTRICAL MEASUREMENTS

Regulation : R13

Subject Code : C317

Branch : Electrical and Electronics Engineering

Year & Semester : III B.Tech- II Semester

INSTITUTE VISION, MISSION

DEPARTMENT VISION, MISSION

PEO & PO/PSO

INSTITUTE

VISION

Produce globally competent and quality technocrats with human values for the holistic needs of industry and society.

MISSION

- Creating an outstanding infrastructure and platform for enhancement of skills, knowledge and behaviour of students towards employment and higher studies.

- Providing a healthy environment for research, development and entrepreneurship, to meet the expectations of industry and society.

- Transforming the graduates to contribute to the socio-economic development and welfare of the society through value based education.

LENDI INSTITUTE OF ENGINEERING AND TECHNOLOGY
(Approved by A.I.C.T.E & Affiliated to JNTU,Kakinada)
Jonnada (Village), Denkada (Mandal), VizianagaramDist – 535 005
Phone No. 08922-241111, 241112
E-Mail: lendi_2008@yahoo.com Website: www.lendi.org

Department of Electrical and Electronics Engineering

VISION

To be a hub for imparting knowledge, skills, and behaviour for exemplary contributions in the field of Electrical and Electronics Engineering.

MISSION

- To impart Technical Education through the state-of-the-art infrastructure facilities, laboratories and instruction.
- To inculcate industry oriented learning through industrial visits, internships, projects at Industries, MOUs, to make students' technically skills oriented.
- Creating conducive environment for higher education, employment and entrepreneurship through quality education, professional skills and research.
- To promote societal commitment among students by inculcating moral and ethical values.

PROGRAM EDUCATIONAL OBJECTIVES (PEOs)

PEO1: Graduates shall have strong foundation in core and allied Electrical and Electronics Engineering, in sciences and mathematics, to become globally competent in designing, modelling and critical problem solving.

PEO2: Graduates shall involve in research activities in the field of electrical and electronics engineering through lifelong learning and provide solutions to engineering problems for sustainable development of society.

PEO3: Graduates shall have good communication skills and socio-ethical values for getting employment or higher studies by excelling in competitive examinations and be able to work in supportive and leadership roles.

PROGRAM OUTCOMES (POs)

PO1	**Engineering Knowledge**: Apply the knowledge of mathematics, science, engineering fundamentals, and an engineering specialization to the solution of complex engineering problems.
PO2	**Problem Analysis**: Identify, formulate, review research literature, and analyze complex engineering problems reaching substantiated conclusions using first principles of mathematics, natural sciences, and engineering sciences.
PO3	**Design/development of Solutions**: Design solutions for complex engineering problems and design system components or processes that meet the specified needs with appropriate consideration for the public health and safety, and the cultural, societal, and environmental considerations
PO4	**Conduct Investigations of Complex Problems**: Use research-based knowledge and research methods including design of experiments, analysis and interpretation of data, and synthesis of the information to provide valid conclusions.
PO5	**Modern Tool Usage**: Create, select, and apply appropriate techniques, resources, and modern engineering and IT tools including prediction and modelling to complex engineering activities with an understanding of the limitations.
PO6	**The Engineer and Society**: Apply reasoning informed by the contextual knowledge to assess societal, health, safety, legal and cultural issues and the consequent responsibilities relevant to the professional engineering practice.
PO7	**Environment and Sustainability**: Understand the impact of the professional engineering solutions in societal and environmental contexts, and demonstrate the knowledge of, and need for sustainable development.
PO8	**Ethics**: Apply ethical principles and commit to professional ethics and responsibilities and norms of the engineering practice.
PO9	**Individual and Team Work**: Function effectively as an individual, and as a member or leader in diverse teams, and in multidisciplinary settings.
PO10	**Communication**: Communicate effectively on complex engineering activities with the engineering community and with society at large, such as, being able to comprehend and write effective reports and design documentation, make effective presentations, and give and receive clear instructions.
PO11	**Project Management and Finance**: Demonstrate knowledge and understanding of the engineering and management principles and apply these to one's own work, as a member and leader in a team, to manage projects and in multidisciplinary environments.
PO12	**Life-Long Learning**: Recognize the need for, and have the preparation and ability to engage in independent and life-long learning in the broadest context of technological change.

PROGRAM SPECIFIC OUTCOMES (PSOs)

PSO1: Capable of design, develop, test, verify and implement electrical and electronics engineering systems and products.

PSO2: Succeed in national and international competitive examinations for successful higher studies and employment.

COURSE OUTCOMES (COs)

S. No	Description
CO1	Understand the concepts of measurements of electrical quantities and calibration of different electrical measuring instruments.
CO2	Determination of 3-phase power of balanced loads using wattmeters and CT'S
CO3	Testing and calibration of various electrical quantity measuring instruments.
CO4	Measurement of the basic elements (R, L & C) in electrical circuits using different AC & DC Bridges.
CO5	Study the three voltmeter and 3 ammeter concept to measure various parameters of electrical circuits.

.

COURSE DATA SHEET

PROGRAM: **EEE**	DEGREE: **B.TECH**
COURSE**: ELECTRICAL MEASUREMENTS LAB**	YEAR & SEMESTER: **III-II** CREDITS: **2**
COURSE CODE: **C317** REGULATION:**R-13**	COURSE TYPE: **CORE**
COURSE AREA/DOMAIN:	CONTACT HOURS: **3 hours/Week.**
CORRESPONDING LAB COURSE CODE (IF ANY):	LAB COURSE NAME (IF ANY):

SYLLABUS:

EXP. NO	NAME OF THE EXPERIMENTS	HOURS
1.	Calibration and Testing of single phase energy Meter.	3
2.	Calibration of dynamometer wattmeter using phantom loading UPF	3
3.	Crompton D.C. Potentiometer – Calibration of PMMC ammeter and PMMC voltmeter.	3
4.	Capacitance Measurement using Schering bridge	3
5.	Inductance Measurement using Anderson bridge.	3
6.	Measurements of 3 phase reactive power with single–phase wattmeter for balanced loading.	3
7.	Calibration of LPF wattmeter – by direct loading.	3
8.	Measurement of 3 phase power with single watt meter and 2 No's of C.T	3
9.	Measurement of Power by 3 Voltmeter and 3 Ammeter methods.	3
10.	Parameters of choke coil.	3
	TOTAL HOURS	**30**

TEXT/REFERENCE BOOKS:

T	Electrical and Electronic Measurements and instrumentation by R.K.Rajput, S.Chand.
R	Electrical & Electronic Measurement & Instruments by A.K.Sawhney Dhanpat Rai & Co. Publications.

COURSE PRE-REQUISITES:

C.CODE	COURSE NAME	DESCRIPTION	SEM
C301	Electrical measurements	PMMC, MI meters, Energy meter, Dynamometer type wattmeter, Crompton's D.C. Potentiometer, Schering bridge, Anderson bridge, LPF wattmeter, Phantom loading, current transformer.	**III-I**

COURSE OBJECTIVES:

1	To understand the correct function of electrical parameters and calibration of voltage, current, single phase and three phase power and energy.
2	To measure the parameters of choke coil.
3	To measure the resistance, inductance and capacitance of a circuits through appropriate methods.

COURSE OUTCOMES:

S.NO	DESCRIPTION	PO(1..12) MAPPING	PSO(1,2) MAPPING
C317.1	Understand the concepts of measurements of electrical quantities and calibration of different electrical measuring instruments.	PO1,PO2,PO3,PO4,PO9,PO12	PSO1,PSO2
C317.2	Determination of 3-phase power of balanced loads using wattmeters and CT'S.	PO1,PO2,PO3,PO4,PO9,PO12	PSO1,PSO2
C317.3	Testing and calibration of various electrical quantity measuring instruments.	PO1,PO2,PO3,PO4,PO9,PO12	PSO1,PSO2
C317.4	Measurement of the basic elements (R, L & C) in electrical circuits using different AC & DC Bridges.	PO1,PO2,PO3,PO4,PO9,PO12	PSO1,PSO2
C317.5	Study the three voltmeter and 3 ammeter concept to measure various parameters of electrical circuits.	PO1,PO2,PO3,PO4, PO9, PO12	PSO1,PSO2
COURSE OVERALL PO/PSO MAPPING: PO1, PO2, PO3, PO4, PO9, PO12, PSO1, PSO2.			

COURSE OUTCOMES VS POs MAPPING (DETAILED; HIGH: 3; MEDIUM: 2; LOW: 1**):**

S. No	PO1	PO2	PO3	PO4	PO5	PO6	PO7	PO8	PO9	PO10	PO11	PO12	PSO1	PSO2
C317.1	3	3	3	2	-	-	-	-	2	-	-	2	2	2
C317.2	3	3	3	2	-	-	-	-	2	-	-	2	2	2
C317.3	3	3	3	2	-	-	-	-	2	-	-	2	2	2
C317.4	3	3	3	2	-	-	-	-	2	-	-	2	2	2
C317.5	3	3	3	2	-	-	-	-	2	-	-	2	2	2
C317*	3	3	3	2	-	-	-	-	2	-	-	2	2	2

** For Entire Course, PO & PSO Mapping*

POs & PSO REFERENCE:

PO1	Engineering Knowledge	PO7	Environment & Sustainability	PSO1	Capable of design, develop, test, verify and implement electrical and electronics engineering systems and products.
PO2	Problem Analysis	PO8	Ethics	PSO2	Succeed in national and international competitive examinations for successful higher studies and employment.
PO3	Design & Development	PO9	Individual & Team Work		
PO4	Investigations	PO10	Communication Skills		
PO5	Modern Tools	PO11	Project Mgt. & Finance		
PO6	Engineer & Society	PO12	Life Long Learning		

COs Vs POs MAPPING JUSTIFICATION:

S.NO	PO/PSO MAPPED	LEVEL OF MAPPING (PO/PSO)	JUSTIFICATION
C317.1	PO1,PO2,PO3,PO4,PO9,PO12/PSO1,PSO2	3,3,3,2,2,2/2,2	understand the concepts of measurements of electrical quantities and calibration of different electrical measuring instruments.
C317.2	PO1,PO2,PO3,PO4,PO9,PO12/PSO1,PSO2	3,3,3,2,2,2/2,2	Determine 3-phase power of balanced loads using wattmeters and CT'S.
C317.3	PO1,PO2,PO3,PO4,PO9,PO12/PSO1,PSO2	3,3,3,2,2,2/2,2	Test and calibrate various electrical quantity measuring instruments.
C317.4	PO1,PO2,PO3,PO4,PO9,PO12/PSO1,PSO2	3,3,3,2,2,2/2,2	Measure the basic elements (R, L & C) in electrical circuits using different AC & DC Bridges.
C317.5	PO1,PO2,PO3,PO4,PO9,PO12/PSO1,PSO2	3,3,3,2,2,2/2,2	Study the three voltmeter and 3 ammeter concept to measure various parameters of electrical circuits.
C317*	PO1,PO2,PO3,PO4,PO9,PO12/PSO1,PSO2	3,3,3,2,2,2/2,2	Understand the concepts of measurements of electrical quantities and calibration of different electrical measuring instruments.

GAPS IN THE SYLLABUS - TO MEET INDUSTRY/PROFESSION REQUIREMENTS, POs & PSOs:

S.NO	DESCRIPTION	PROPOSED ACTIONS	PO(1,2….12), PSO(1,2) MAPPING	CO(1,2…5) MAPPING
1	Calibration of dynamometer type power factor meter.	To be designed and conducted in lab.	PO1,PO2,PO3,PO4,PO9,PO12,PSO1,PSO2	CO1, CO3
2	Measurement of resistance by Voltmeter-Ammeter method.	To be designed and conducted in lab.	PO1,PO2,PO3,PO4,PO9,PO12,PSO1,PSO2	CO1, CO4, CO5

PROPOSED ACTIONS: TOPICS BEYOND SYLLABUS/ASSIGNMENT/INDUSTRY VISIT/GUEST LECTURER/NPTEL ETC

TOPICS BEYOND SYLLABUS/ADVANCED TOPICS/DESIGN:

SNO	DESCRIPTION	PO(1,2….12), PSO(1,2) MAPPING	CO(1,2…5) MAPPING
1	Calibration of dynamometer type power factor meter.	PO1,PO2,PO3,PO4, PO9,PO12,PSO1,PSO2	CO1, CO3
2	Measurement of resistance by voltmeter-Ammeter method.	PO1,PO2,PO3,PO4,PO9, PO12,PSO1,PSO2	CO1, CO4, CO5

WEB SOURCE REFERENCES:

1	www.scribd.com
2	www.electrical4u.com.

DELIVERY/INSTRUCTIONAL METHODOLOGIES:

√ CHALK & TALK	☐ STUD. ASSIGNMENT	√ WEB RESOURCES	√ NPTEL/OTHERS
☐ LCD/SMART BOARDS	☐ STUD. SEMINARS	☐ ADD-ON COURSES	☐ WEBNIARS

ASSESSMENT METHODOLOGIES-DIRECT

☐ ASSIGNMENTS	☐ STUD. SEMINARS	√ TESTS/MODEL EXAMS	√ UNIV. EXAMINATION
√ STUD. LAB PRACTICES	√ STUD. VIVA	☐ MINI/MAJOR PROJECTS	☐ CERTIFICATIONS
☐ ADD-ON COURSES	☐ OTHERS		

ASSESSMENT METHODOLOGIES-INDIRECT

√ ASSESSMENT OF COURSE OUTCOMES (BY FEEDBACK, ONCE)	√ STUDENT FEEDBACK ON FACULTY (TWICE)
☐ ASSESSMENT OF MINI/MAJOR PROJECTS BY EXT. EXPERTS	☐ OTHERS

Prepared by **Approved by**

Lab Incharge **HOD, EEE**

ELECTRICAL MEASUREMENTS LAB

III Year – II SEMESTER

T	P	C
0	3	2

Learning objectives:

- To understand the correct function of electrical parameters and calibration of voltage, current, single phase and three phase power and energy, and measurement of electrical characteristics of resistance, inductance and capacitance of a circuits through appropriate methods.
- To understand measurement of illumination of electrical lamps.
- To understand testing of transformer oil.
- To measure the parameters of choke coil

Any 10 of the Following Experiments are to be conducted

1. Calibration and Testing of single phase energy Meter
2. Calibration of dynamometer wattmeter using phantom loading-UPF
3. Crompton D.C. Potentiometer – Calibration of PMMC ammeter and PMMC voltmeter
4. Kelvin's double Bridge – Measurement of resistance – Determination of Tolerance.
5. Capacitance measurement using Schering bridge.
6. Inductance measurement using Anderson bridge.
7. Measurements of 3 phase reactive power with single-phase wattmeter for balanced loading.
8. Measurement of complex power with Trivector meter and verification.
9. Optical bench – Determination of polar curve measurement of MHCP of electrical lamp.
10. Calibration LPF wattmeter – by direct loading.
11. Measurement of 3 phase power with single watt meter and 2 No's of C.T.
12. C.T. testing using mutual Inductor – Measurement of % ratio error and phase angle of given C.T. by Null method.
13. P.T. testing by comparison – V.G. as Null detector – Measurement of % ratio error and phase angle of the given P.T.
14. Dielectric oil testing using H.T. testing Kit.
15. LVDT and capacitance pickup – characteristics and Calibration
16. Resistance strain gauge – strain measurements and Calibration.
17. Polar curve using Lux meter, Measurement of intensity of illumination of fluorescent lamp.
18. Transformer turns ratio measurement using AC bridge.
19. A.C. Potentiometer – Polar form/Cartesian form – Calibration of AC Voltmeter, Parameters of Choke.
20. Measurement of power by using 3 voltmeter and 3 ammeter methods.
21. Measurement of parameters of a choke coil using 3 voltmeter and 3 ammeter methods.

Learning outcomes:

- To be able to measure accurately the electrical parameters voltage, current, power, Energy and electrical characteristics of resistance, inductance and capacitance.
- To be able to measure illumination of electrical lamps.
- To be able to test transformer oil for its effectiveness.
- To be able to measure the parameters of inductive coil.

LIST OF EXPERIMENTS

1. Calibration and testing of Single phase Energy meter.

2. Measurement of 3 phase reactive power with single wattmeter for balanced loading.

3. Inductance measurement using Anderson bridge.

4. Capacitance measurement using Schering bridge.

5. Calibration of LPF Wattmeter by direct loading.

6. Calibration of Dynamometer Wattmeter using Phantom loading-UPF.

7. Measurement of 3 phase power with single wattmeter and 2 No's of C.T.

8. Measurement of parameters of a Choke coil using 3-Voltmeter and 3-Ammeter methods.

9. Measurement of power of a Choke coil using 3-Voltmeter and 3-Ammeter methods.

10. Crompton D.C. Potentiometer- Calibration of PMMC Ammeter and PMMC Voltmeter.

EXPERIMENTS BEYOND CURRICULUM

1. Calibration of Dynamometer type power factor meter.

2. Measurement of resistance by Voltmeter-Ammeter method.

INDEX

S. No	Title of the Experiment	CO	PO	Page No
1	Calibration and testing of Single phase Energy meter.	CO1,CO3	PO1,PO2,PO3, PO4,PO9,PO12	1-6
2	Measurements of 3 phase reactive power with single wattmeter for balanced loading.	CO1,CO2	PO1,PO2,PO3, PO4,PO9,PO12	7-10
3	Inductance measurement using Anderson bridge.	CO1,CO4	PO1,PO2,PO3, PO4,PO9,PO12	11-13
4	Capacitance measurement using Schering bridge.	CO1,CO3	PO1,PO2,PO3, PO4,PO9,PO12	14-17
5	Calibration of LPF Wattmeter by direct loading.	CO1,CO3	PO1,PO2,PO3, PO4,PO9,PO12	18-22
6	Calibration of Dynamometer Wattmeter using Phantom loading-UPF.	CO1,CO2	PO1,PO2,PO3, PO4,PO9,PO12	23-27
7	Measurement of 3 phase power with single wattmeter and 2 No's of C.T.	CO1,CO5	PO1,PO2,PO3, PO4,PO9,PO12	28-30
8	Measurement of parameters of a Choke coil using 3-Voltmeter and 3-Ammeter methods.	CO1,CO5	PO1,PO2,PO3, PO4,PO9,PO12	31-35
9	Measurement of power of a Choke coil using 3-Voltmeter and 3-Ammeter methods.	CO1,CO3	PO1,PO2,PO3, PO4,PO9,PO12	36-40
10	Crompton D.C. Potentiometer- Calibration of PMMC Ammeter and PMMC Voltmeter.	CO1,CO3	PO1,PO2,PO3, PO4,PO9,PO12	41-45
Experiments beyond curriculum				
1	Calibration of Dynamometer type power factor meter.	CO1,CO3	PO1,PO2,PO3, PO4,PO9,PO12	48-52
2	Measurement of resistance by Voltmeter-Ammeter method.	CO1	PO1,PO2,PO3, PO4,PO9,PO12	53-54

1. CALIBRATION AND TESTING OF SINGLE PHASE ENERGY METER

1. AIM: To Calibrate and test the given Single phase energy meter by direct loading.

2. APPARATUS:

S. No	Name	Type	Range	Quantity
1	Single phase Energy Meter	Induction	1500 Rev/KWh	1
2	Wattmeter	UPF	300V/5A	1
3	Voltmeter	MI	(0-300)V	1
4	Ammeter	MI	(0-5)A	1
5	Single Phase Variac	1-Ø	230V/ (0-270)V,10A	1
6	Rheostat	WW	110Ω/5A	1
7	Stop Watch	Digital	-	1
8	Connecting Wires	-	-	As Per Requirement

3. CIRCUIT DIAGRAM:

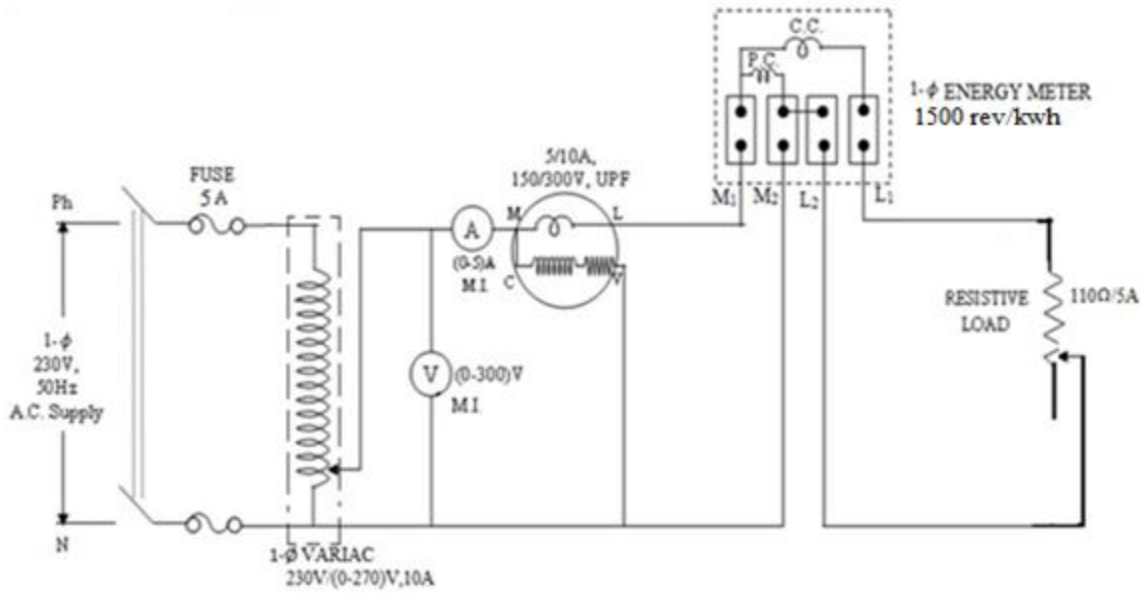

Fig: Calibration & Testing of Single phase energy meter

4. THEORY:

Induction type of energy meters are universally used for measurement of energy in domestic and industrial AC circuits. Induction type of meters possesses lower friction and higher torque/weight ratio. Also they are inexpensive and accurate, and retain their accuracy over a wide range of loads and temperature conditions.

There are four main parts of the operating mechanism:

(i) Driving system
(ii) Moving system
(iii) Braking system and
(iv) Registering system.

4.1 Driving System:

The driving system of the meter consists of two electro-magnets. The core of these electromagnets is made up of silicon steel laminations. The coil of one of the electro-magnets is excited by the load current. This coil is called the 'current coil'. The coil of second electromagnet is connected across the supply and, therefore, carries a current proportional to the supply voltage. This coil is called the 'pressure coil'. Consequently the two electromagnets are known as series and shunt magnets respectively. Copper shading bands are provided on the central limb. The position of these banks is adjustable. The function of these bands is to bring the flux produced by the shunt magnet exactly in quadrature with the applied voltage.

4.2 Moving System:

This consists of an aluminium disc mounted on a light alloy shaft. This dis is positioned in the air gap between series and shunt magnets.

4.3 Braking System:

A permanent magnet positioned near the edge of the aluminium disc forms the braking system. The aluminium disc moves in the field of this magnet and thus provides a braking torque. The position of the permanent magnet is adjustable, and therefore, braking torque can be adjusted by shifting the permanent magnet to different radial positions as explained earlier.

4.4 Registering (counting) Mechanism:

The function of a registering or counting mechanism is to record continuously a number which is proportional to the revolutions made by the moving system. In all induction instruments we have two fluxes produced by currents flowing in the windings of the instrument. These fluxes are alternating in nature and so they produce emfs in a metallic disc or a drum provided for the purpose. These emfs in turn circulate eddy currents in the metallic disc or the drum. The braking torque is produced by the interaction of eddy current and the field of permanent magnet. This torque is directly proportional to the product of flux of the magnet, magnitude of eddy current and effective radius 'R' from axis of disc. The moving system attains a steady speed when the driving torque equal braking torque.

The term testing includes the checking of the actual registration of the meter as well as the adjustments done to bring the errors of the meter with in prescribed limits. AC energy meters should be tested for the following conditions:

1. At 5% of marked current with unity pf.
2. At 100% (or) 125% of marked current.
3. At one intermediate load with unity pf.
4. At marked current and 0.5 lagging pf.

5. PROCEDURE:

1. Connect the circuit as per the circuit diagram.
2. Keep the single phase variac at zero volt position.
3. Now switch on the power supply.
4. Gradually vary the variac to apply the rated voltage (230 volts).
5. For different values of load, note down the readings of the ammeter, voltmeter, wattmeter and time taken for 5 revolutions of the disc.
6. Gradually vary the variac to minimum or zero volt position.
7. Switch off the power supply.
8. Calculate observed reading, actual reading, %error, %correction.
9. Draw the graph between Load current (vs) % Error.

6. PRECAUTIONS:

1. Avoid loose connections.
2. Be Careful while observing the revolutions with stop watch.
3. Do not apply more current, more than the rated energy meter current.
4. Take readings without error.
5. Live terminals should not be touched.

7. OBSERVATION TABLE:

S. No	Supply Voltage (Volts)	Load Current (Amps)	Power (Watts)	Time for 5 rev (sec)	Actual Energy E_1	Indicated Energy $E_2=W*t$	% Error = $(E_2-E_1)/E_1*100$
1	230	2	460	26.72	3.414	3.333	-2.4
2	230	2.2	500	24.06	3.342	3.333	-0.2
3	230	2.4	560	21.65	3.37	3.333	-1
4	230	2.6	600	20.16	3.36	3.333	-0.8
5	230	2.8	640	19	3.378	3.333	-1.33

Actual Energy = E1

Indicated Energy=E_2=W*t

8. MODEL GRAPH:

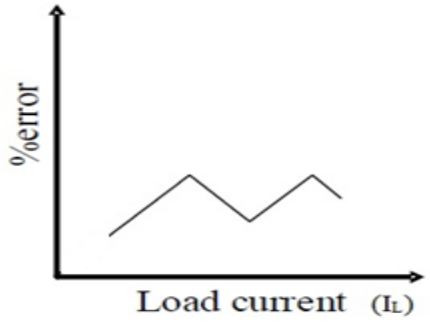

9. MODEL CALCULATIONS:

Actual Energy E_1 = No. of revolutions / (energy meter constant (k)

$= (5*10^3)/1500 = 3.33$ Wh.

Where, no. of revolutions = 5

Energy meter constant k=1500 rev/KWh

Practical reading $E_2 = W *t = (460*26.72)/3600 = 3.414$

% Error = $(E_2-E_1)/E_1*100 = -2.4$

%Correction = - % Error = + 2.4

Page No.

Calibration & testing of Energymeter

Date:

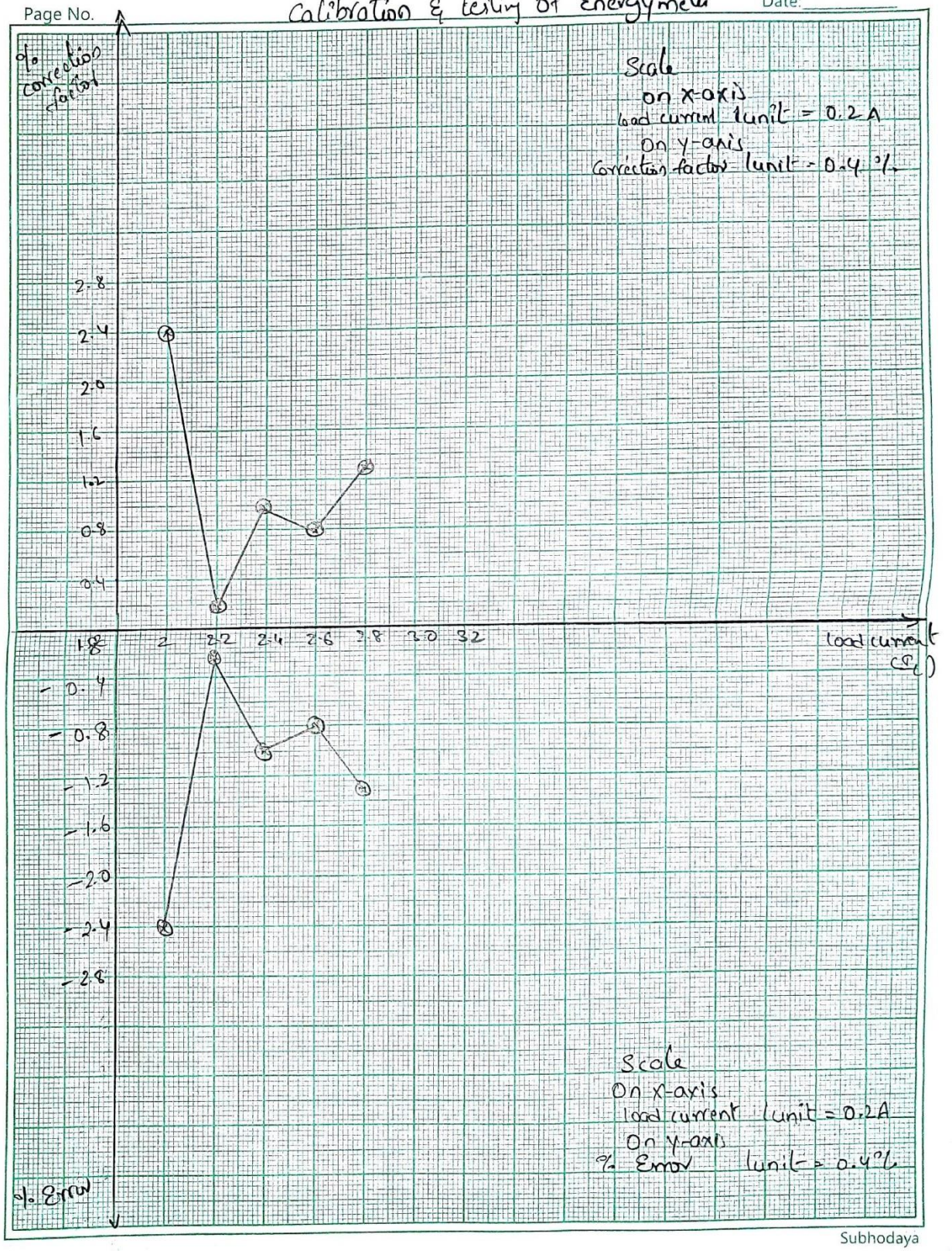

Subhodaya

10. RESULT:

Hence calibrated the given single phase energy meter and tested at different loads and the graph is plotted for % Error Vs I_L and % Correction factor Vs I_L.

11. OUTCOME:

By conducting this experiment CO1,CO3, PO1,PO2PO3,PO4,PO9,PO12 are attained.

12. APPLICATIONS:

Electricity meters measure and display power consumption in residential, industrial, and commercial dwellings, as well as sub-stations in the electric grid. They are evolving rapidly, and different solutions and architectures are required to meet varying regional utility requirements.

13. VIVA QUESTIONS:

1. What is an energy meter?
2. What are the types of energy meter?
3. Which type of energy meters are used in dc circuits?
4. Energy meter is an _____ (i) integrating instrument (ii) indicating instrument
5. Can the measured percentage error be negative?
6. What do you mean by 'torque adjustment'?
7. What is operating torque?
8. Define braking torque?
9. When does the disc on the spindle rotate with a constant speed?
10. The operating torque is directly proportional to speed, state true or false.

2. MEASUREMENT OF 3-PHASE REACTIVE POWER WITH SINGLE WATTMETER FOR BALANCED LOADING

1. AIM:

To measure the 3-Phase reactive power using single wattmeter for balanced loading.

2. APPARATUS:

S. No	Name	Type	Range	Quantity
1	Voltmeter	MI	(0-600)V	1
2	Ammeter	MI	(0-10)A	1
3	Wattmeter	UPF	600V,10A	1
4	Three Phase Variac	AC	415V/(0-470)V 15A	1
5	Three Phase Variable Inductive Load	-	415V,10A	1
6	Connecting Wires	-	-	As Per Requirement

3. CIRCUIT DIAGRAM:

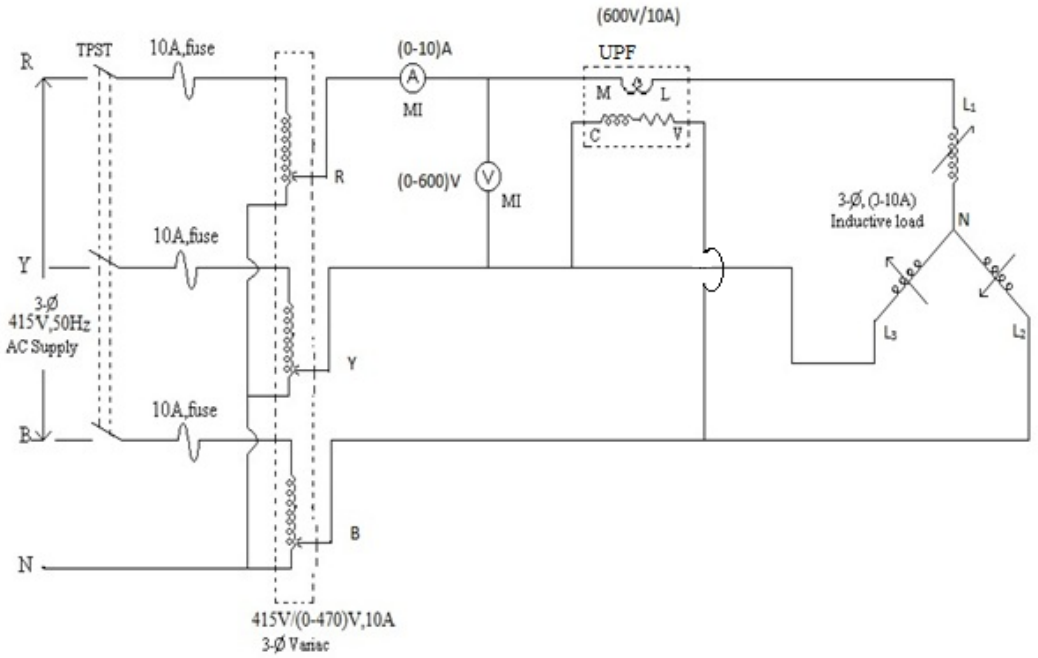

Fig: Measurement of 3-phase reactive power by single Wattmeter

4. THEORY:

The basic principle used for measuring active as well as reactive power in an a.c. circuit is the Blondels theorem.If a network is supplied through 'n' conductors, the total power is measured by summing the readings of 'n' wattmeters are in each line and the corresponding voltage element is connected between the line and a common point.

If the common point is located on one of the lines, then the power may be measured by (n-1) wattmeters. One wattmeter method can be used for the measurement of power but this method is applicable only for balanced loads the current coil is connected in one of the lines and one end of the pressure coil to some line, other end being connected alternatively to other two lines.

In case of balanced three phase circuits it is simple to use a single wattmeter to read reactive power the current coil of the wattmeter is connected in one line and pressure coil is connected across other two lines.

5. PROCEDURE:

1. Connect the circuit as per the circuit diagram.
2. Keep the three phase variac at zero volt position and inductive load at minimum position.
3. Switch on the three phase power supply.
4. Now slowly vary the three phase variac to its rated voltage (415V) and note down the Readings of the ammeter, voltmeter and wattmeter.
5. By increasing the inductive load and tabulates the readings of ammeter, voltmeter and Wattmeter up to the rated current.
6. Now set the inductive load and three phase variac to its minimum position.
7. Switch off the three phase supply.
8. Calculate the three phase reactive power.

6. PRECAUTIONS:

1. Live terminals should not be touched.
2. Connect the circuit without any loose connection.
3. If wattmeter reads reverse in reading change either current coil or pressure coil connections.
4. Load current should not exceed rated current value.

7. PHASOR DIAGRAM:

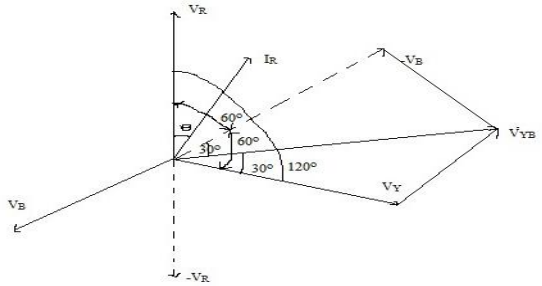

8. OBSERVATION TABLE:

S. No	Line Voltage (V_L)Volts	Load Current (I_L)Amps	Power (W)Watts	Q=√3*W (VAR)
1	415	2	120	1662.76
2	415	3	150	2078.46
3	415	4	210	2909.84
4	415	5	250	3464.1
5	415	6	300	4156.92
6	415	7	360	4988.3

9. MODEL CALCULATIONS:

When the load is balanced,

$P = 3*V_{ph}*I_{ph}\cos\Phi$

Hence one wattmeter issued to measure the single phase power & then it is to be multiplied by 3

$Q = 3VI\sin\Phi$

$Q_{1-\Phi} = 3\ V_{Ph}I_{Ph}\sin\Phi$

$Q_{3-\Phi} = 3\ (V_L/\sqrt{3})\ I_L\sin\Phi$

$Q_{3-\Phi} = \sqrt{3}\ V_L\ I_L\sin\Phi$

$\sin\Phi = (Q_{3-\Phi})/(\sqrt{3}\ V_L\ I_L)$

Similarly,

$W = V_L\ I_L\sin\Phi$

$\sqrt{3}\,W = \sqrt{3}\,V_L\ I_L\sin\Phi$

$\sqrt{3}\,W = Q_{3-\Phi}$

10. RESULT:

The three phase Reactive power (Q= 1662.76 VAR) with single-phase wattmeter for balanced inductive load is measured.

11. OUTCOME:

By conducting this experiment CO1, CO2, PO1,PO2, PO3,PO4,PO9,PO12 are attained.

12. APPLICATION:

1. It is used in electro-mechanical devices and other loads.

13. VIVA QUESTIONS:

1. How do you measure power?
2. State the difference between wattmeter and an energy meter?
3. Types of watt meters?
4. Which types of wattmeter is widely used?
5. How is the controlling torque obtained?
6. What are the errors in dynamometer type watt meters? State a few.
7. How many watt meters do we require to measure 3-phase power?
8. What is reactive power? State the formula.
9. How many watt meters are required to measure 3-phase reactive power?
10. How do we minimize the errors due to eddy currents in watt meters?

3. ANDERSON BRIDGE

1. AIM:

To measure the unknown self inductance by using Anderson bridge.

2. APPARATUS:

S. No	Name of the Equipment	Quantity
1	Anderson Bridge Kit	1
2	Headset	1
3	Patch Chords	As Per Requirement

3. CIRCUIT DIAGRAM:

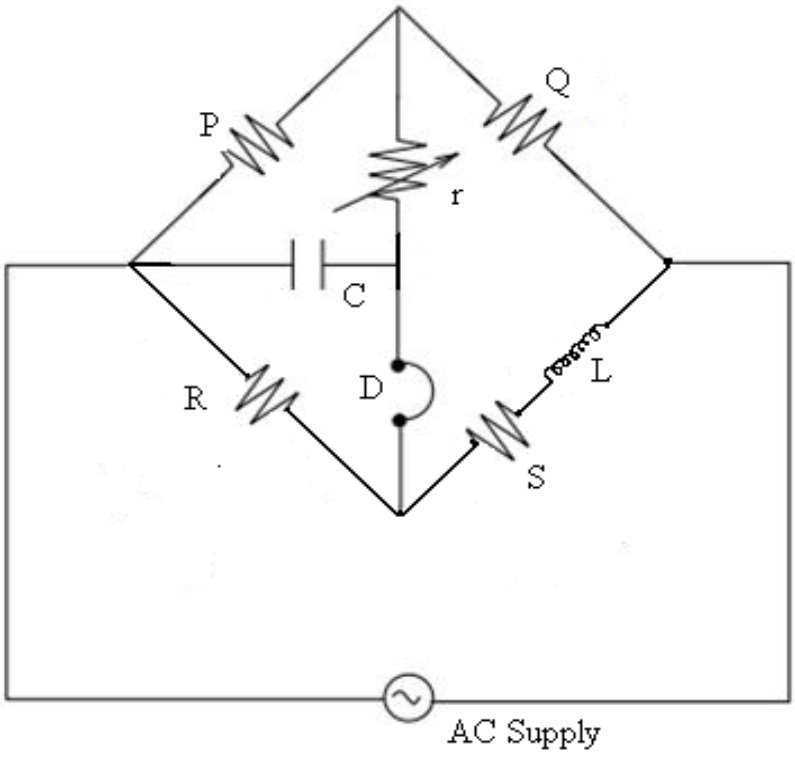

Fig: Anderson Bridge

4. THEORY:

AC bridges are often used to measure the value of unknown impedance (self/mutual inductance of inductors or capacitance of capacitors accurately). A large number of AC bridges are available and Anderson's Bridge is an AC bridge used to measure self inductance of the coil. It is a modification of Wheatstone Bridge. It enables us to measure the inductance of a coil using capacitor and resistors and does not require repeated balancing of the bridge.

The bridge is balanced by a steady current by replacing the headphone H by moving coil galvanometer and A.C source by a battery. This is done by adjusting the variable resistance, r. After a steady balance has been obtained, inductive balance is obtained by using the A.C source and headphone.

4.1 ADVANTAGES:

1. Fixed capacitor is used in terms of variable capacitor.
2. The bridge is used for accurate determination of inductance in millimeter range.

4.2 DISADVANTAGES:

1. Bridge is more complex
2. Difficult to attain balancing condition.

5. PROCEDURE:

5.1 STEP-I:

1. Connect the circuit to the D.C supply.
2. Switch on the power supply.
3. Now vary the ‘R’ and ‘S’ values one by one until it shows the null deflection in Galvanometer.

5.2 STEP II:

1. Then change the D.C supply terminals to the A.C supply terminals from the unknown port as well as connect the headset to the detector port by disconnecting the galvanometer terminals.
2. Now vary the ‘r’ value to obtain the null beep sound in the headset.
3. Switch off the supply.
4. Disconnect the circuit.

6. PRECAUTIONS:

1. Vary the knobs smoothly.
2. Avoid loose connections.

7. OBSERVATION TABLE:

S.NO	C (μF)	R (Ω)	S(Ω)	r(Ω)	L=RC[r+Q+Qr/P] (H)
Common to 1	0.1 μF	52	0.7	4000	0.0468
Common to 2	0.1 μF	77	0	6000	0.1001
Common to 3	0.1 μF	114	0	6000	0.1482
Common to 1	0.1 μF	52	0.5	2000	0.052
Common to 2	0.2 μF	78	1	2600	0.09672
Common to 3	0.2 μF	115	0.9	2900	0.1564

8. MODEL CALCULATIONS:

$L = C[RQ + r(R+S)]$ = 52*0.1*10^{-6}[4000+1000+(1000*4000/1000)] = 0.0468 H

Where C = 0.01μF

$$X_L = 2\pi fL$$

Where f is the frequency and L is the self inductance of the coil.

9. RESULT:

The unknown inductance is determined by Anderson's bridge.

10. OUTCOME:

By conducting this experiment CO1, CO4, PO1, PO2, PO3, PO4, PO9, PO12 are attained.

11. APPLICATIONS:

1. Anderson Bridge is used to measure low quality factor.
2. To calculate the value of inductive reactance (X_L) of the coil at a particular frequency.

12. VIVA QUESTIONS:

1. What are the advantages and disadvantages of this bridge.
2. What is the application of this bridge.

4. SCHERING BRIDGE

1. AIM:

To measure the unknown capacitance by using Schering bridge.

2. APPARATUS:

S. No	Name of the Equipment	Quantity
1	Schering Bridge Kit	1
2	Headset	1
3	Patch Chords	As Per Requirement

3. CIRCUIT DIAGRAM:

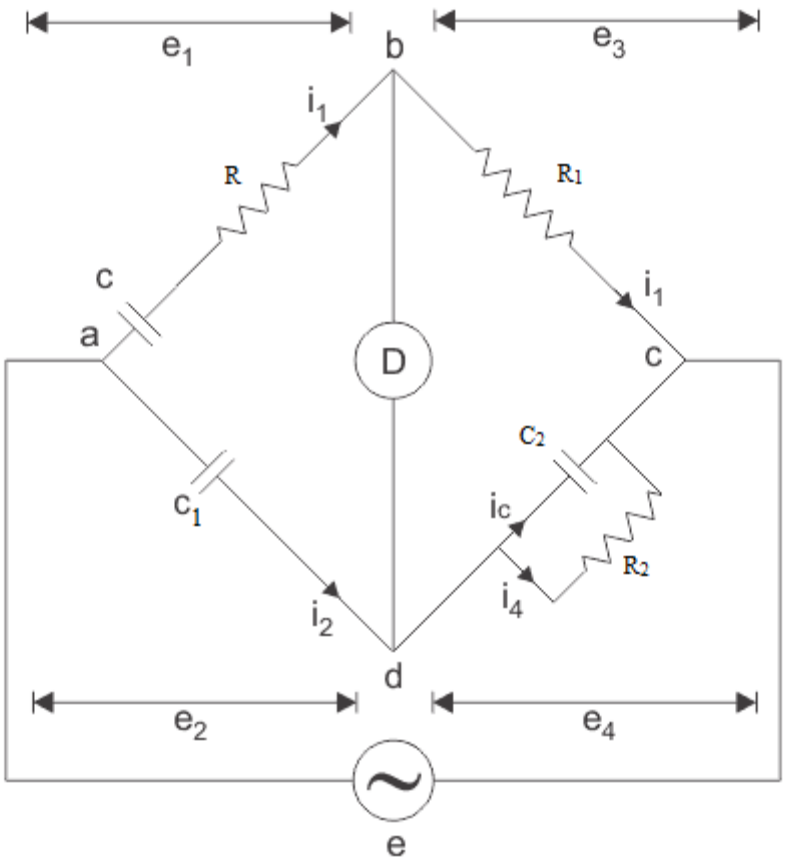

Fig: Schering Bridge

4. THEORY:

This bridge is used to measure to the capacitance of the capacitor, dissipation factor and measurement of relative permittivity.

(a) The bridge arms ab and ad consists of only capacitors as shown the bridge given and impedances of these two arms are quite large as compared to the impedances of bc and cd. The arms bc and cd contains resistor R_1 and parallel combination of capacitor C_2 and resistor R_2 respectively. As impedances of bc and cd are quite small therefore drop across bc and cd is small. The point c is earthed, so that the voltage across bc and dc are few volts above the point c.

(b) The high voltage supply is obtained from a transformer 50 Hz and the detector in this bridge is a vibration galvanometer.

(c) The impedances of arms ab and ad very are large therefore this circuit draws low current hence power loss is low but due to this low current we need a very sensitive detector to detect this low current.

(d) The fixed standard capacitor c_2 has compressed gas which works as dielectric therefore dissipation factor can be taken as zero for compressed air. Earthed screens are placed between high and low arms of the bridge to prevent errors caused due to inter capacitance.

5. PROCEDURE:

1. Connect the circuit as per the circuit diagram.
2. Switch on the power supply.
3. Now fix the 'R_1' value and then vary the 'R_2' value until obtain the null beep sound in the headset.
4. To find the dissipation factor, apply the 'R' value to get beep sound (or) disturbance and then vary the 'C_2' to reduce (or) minimize that beep sound.
5. Take 'C_1' as standard value i.e., 0.01μfd value.
6. Repeat the above process for different 'R_1' values.
7. Switch off the power supply.
8. Disconnect the circuit.

6. PRECAUTIONS:

1. Avoid loose connections.
2. Vary the knobs smoothly.

7. OBSERVATION TABLE:

S. No	$R_1(\Omega)$	$R_2(\Omega)$	$r(\Omega)$	$C=(R_2C_1/R_1)$	$C_2(\mu F)$	$R\ (\Omega)$	Tan δ
Common to 1	1000	1000	300	0.01	0.03	400	0.000942
Common to 2	1000	2000	500	0.02	0.005	500	0.00157
Common to 3	1000	3000	500	0.03	0.005	500	0.00157
Common to 4	1000	4000	600	0.04	0.006	600	0.001884

8. PHASOR DIAGRAM:

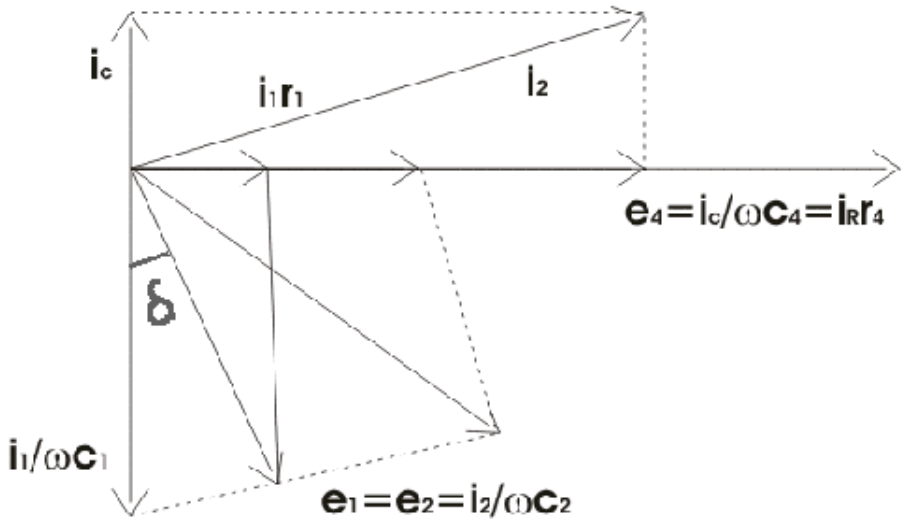

9. RESULT:

By conducting this experiment, the unknown capacitance is determined.

10. OUTCOME:

By conducting this experiment CO1, CO4, PO1, PO2, PO3,PO4, PO9, PO12 are attained

10. APPLICATIONS:

1. It is used for measuring the insulating properties of electrical cables and equipments.
2. It is used in the measurement of the properties of insulators, capacitor bushings, insulating oil and other insulating materials.

11. VIVA QUESTIONS:

1. What are the different types of A.C. Bridges**?**
2. What is meant my Dissipation factor**?**
3. What are the advantages and disadvantages of this bridge?

5. CALIBRATION OF LPF WATTMETER BY DIRECT LOADING TEST

1. AIM:

To calibrate the given LPF wattmeter by direct loading test.

2. APPARATUS:

S. No	Name of The Equipment	Type	Range	Quantity
1	Single Phase Variac	1-Ø	230/(0-270)V 10A	1
2	Voltmeter	MI	(0-300)V	1
3	Ammeter	MI	(0-5)A	1
4	Wattmeter	LPF	300V/5A	1
5	Power Factor Meter	Dynamometer	500V/5A	1
6	Inductive Load	-	5A	1
7	Connecting Wires	-	-	As Per Requirement

3. CIRCUIT DIAGRAM:

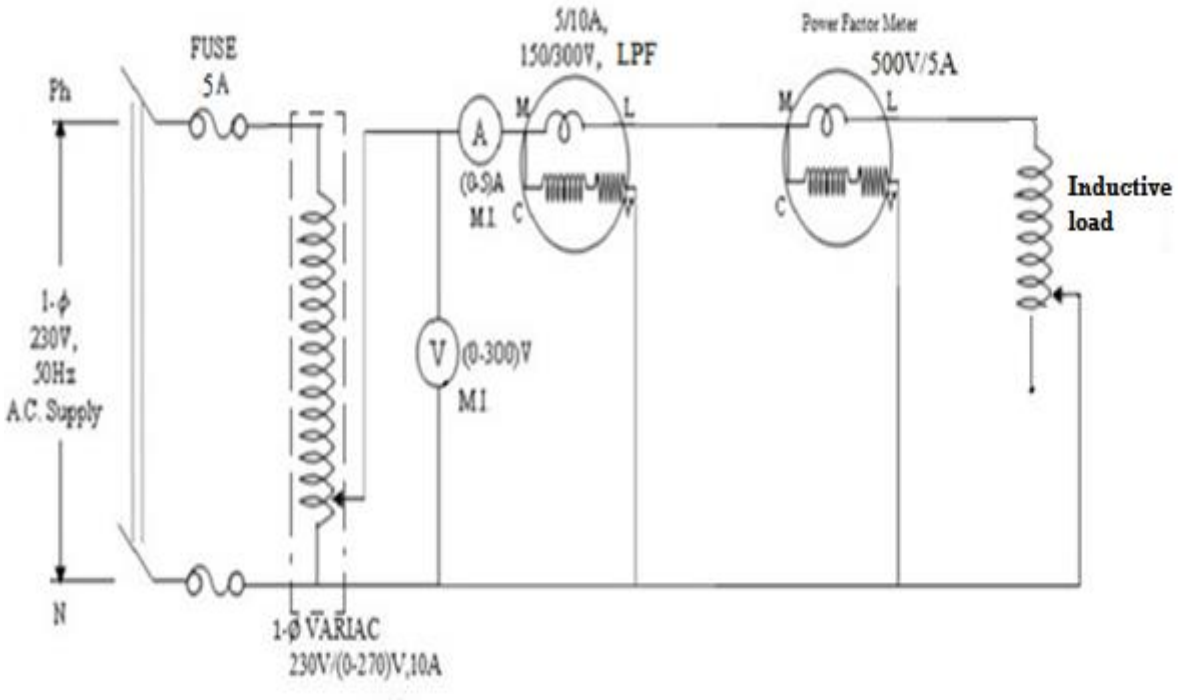

Fig: Calibration of LPF Wattmeter by direct Loading test

4. THEORY:

As the name suggests the low power factor meter are the instruments that measures lower values of power factor accurately. Before we study more about the low power factor meter, it is very essential to know why there is a requirement of low power factor meter though we use ordinary electrodynamometer to measure power factor. Answer to this question is very simple as it gives inaccurate results.

Now there are two main reasons that would suggests us that we should not use ordinary wattmeter in measuring the low value of power factor. (1) The value of deflecting torque is very low even though we fully excite the current and pressure coils. (2) Errors due pressure coil inductance. Above two reasons gives very inaccurate results thus we should not use normal or ordinary wattmeters in measuring the low value of power factor. However by doing some modification or adding some new features we can use modified electrodynamometer wattmeter or low power factor to measure the low power factor accurately.

Here we are going to discuss, where we need to do modification. These are discussed one by one below:

(1) Modification in pressure coil: The electrical resistance of the ordinary wattmeter's pressure coil is reduced to low value such that current in the pressure coil circuit is increased, thus it leads to. In this category two cases diagrams arises and these are shown below:

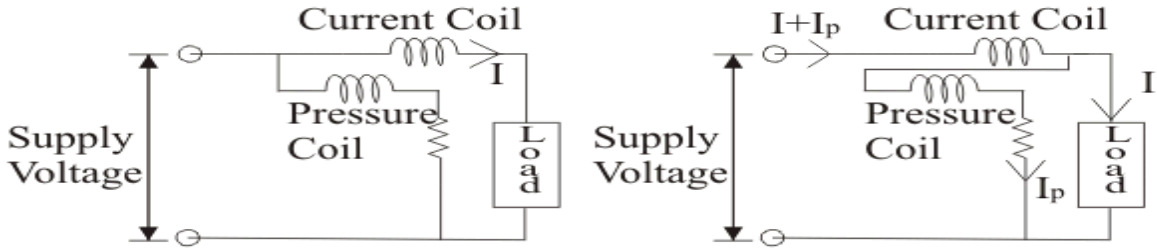

In the first category both the ends of the pressure coil is connected to supply side (i.e. current coil is in series with the load). The supply voltage is equal to the voltage across the pressure coil. Thus in this case we have power shown by the first wattmeter is equal to the power loss in the load plus power loss in the current coil. Mathematically, P_1 = power consumed by load + I^2R_1.

In the second category, the current coil is not in series with the load and the voltage across the pressure coil is not equal to the applied voltage. The voltage across pressure coil is equal to the voltage across the load. In this power shown by the second wattmeter is equal to the power loss in the load plus the power loss in the pressure coil. Mathematically P_2 = power consumed by load + I^2R_2.

5. PROCEDURE:

1. Connect the circuit as per the circuit diagram.
2. Keep the single phase variac at minimum position and the load in maximum position.
3. Switch on the single phase power supply.
4. Now slowly vary the variac to its rated voltage (230V) and note down the readings of ammeter, voltmeter, power factor meter and wattmeter.
5. Then decrease the load in steps and simultaneously note down the readings of ammeter, voltmeter, power factor meter and wattmeter.
6. Finally adjust the load and single phase variac to its starting positions.
7. Switch off the single phase power supply.
8. Calculate the % Error.

6. PRECAUTIONS:

1. Connections should be tight.
2. Avoid parallax errors.

7. OBSERVATION TABLE:

S. No	Voltage (V) Volts	Current (I_l) Amps	Power (W) Watts	Power Factor Cos Ø	Actual Value	% Error
1	230	4.55	600	0.65	680.23	-11.2
2	230	4	456	0.62	570.4	-18.1
3	230	3.5	364	0.61	491.05	-21.85
4	230	3	276	0.6	414	-23.33

8. MODEL GRAPH:

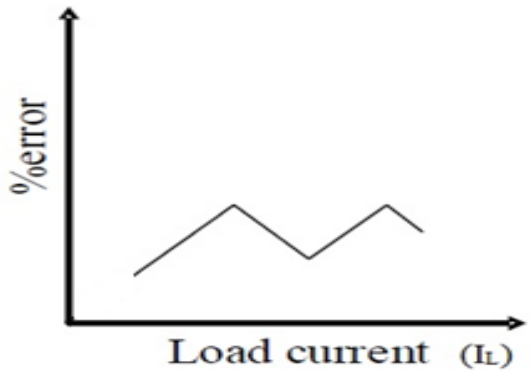

9. MODEL CALCULATIONS:

% Error = [(Indicated Value - Actual Value)/ Actual Value]*100= (600-680.23/600)*100

= -11.2

Where True Value = V*I*COSΦ= 230*4.55*0.65 = 680.23 W and
Practical Value = Wattmeter Reading.

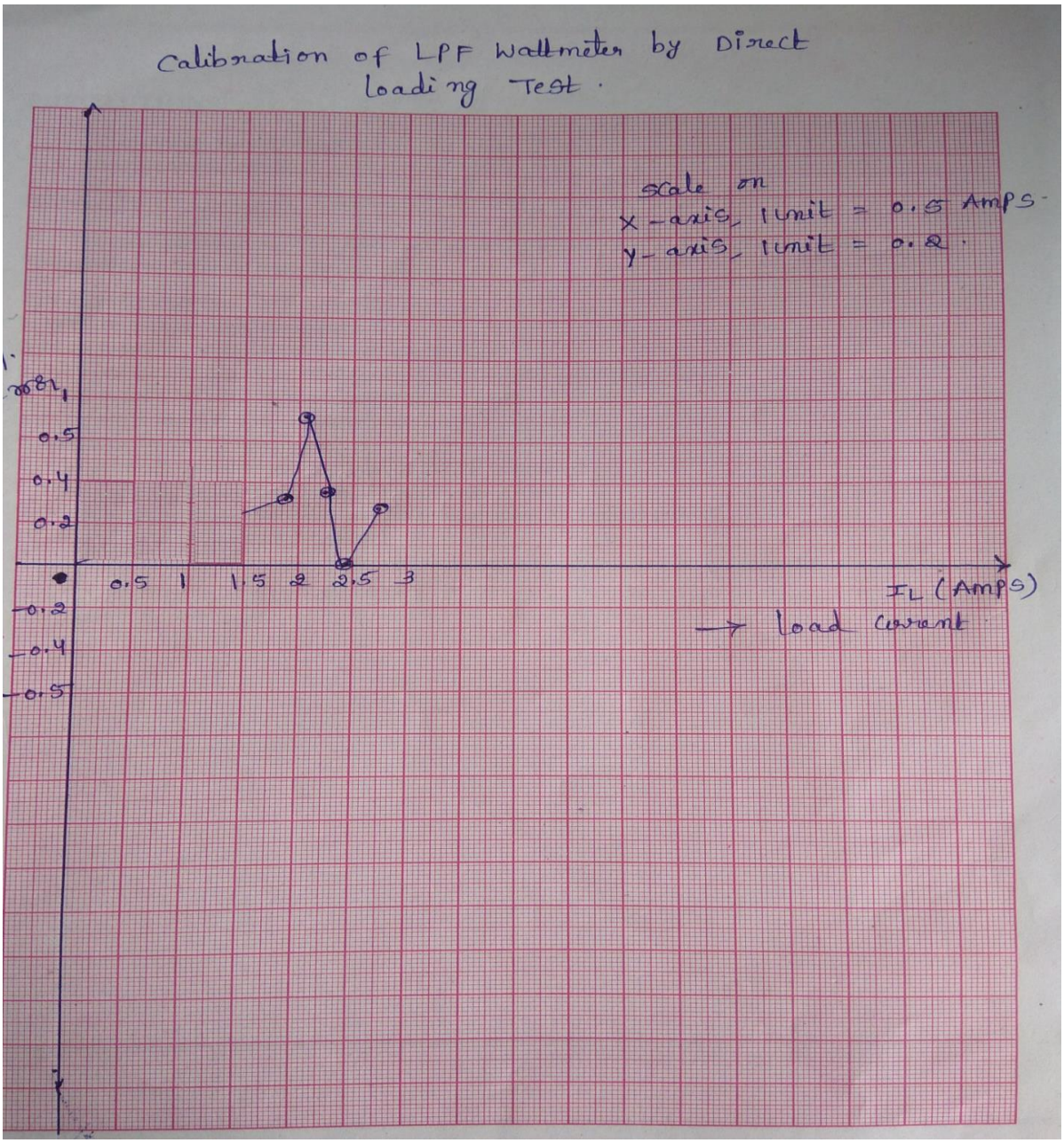

10. RESULT:

The calibration of LPF wattmeter by direct loading test is done and the corresponding %Error, %Correction at different loads are calculated.

11. OUTCOME:

By conducting this experiment CO1, CO3, PO1, PO2, PO3, PO4, PO9, PO12 are attained.

12. VIVA QUESTIONS:

1. What is meant by direct loading?
2. Is the load current in LPF wattmeter is high / low?
3. Why are the LPF wattmeter designed to have a smaller controlling torque?
4. What is the need of introducing compensating coil?
5. State a few errors in dynamometer wattmeter?
6. Applications of LPF wattmeter?
7. Why more operating torque is produced in LPF wattmeter?
8. Why the controlling torque in an LPF wattmeter is less?
9. What are the different methods used for measurement for 3-phase power?
10. What is meant by correction factor?

6. CALIBRATION OF DYNAMOMETER UPF WATTMETER USING PHANTOM LOADING

1. AIM:

To Calibrate the given UPF wattmeter by phantom loading.

2. APPARATUS:

S. No	Name of The Equipment	Type	Range	Quantity
1	Single Phase Variac	1-Ø	230V/(0-270)V 10A	2
2	Ammeter	MI	(0-5)A	1
3	Voltmeter	MI	(0-300)V	1
4	Wattmeter	UPF	300V,5A	1
5	Rheostat	WW	50Ω/5A	1
6	Connecting Wires	-	-	As Per Requirement

3. CIRCUIT DIAGRAM:

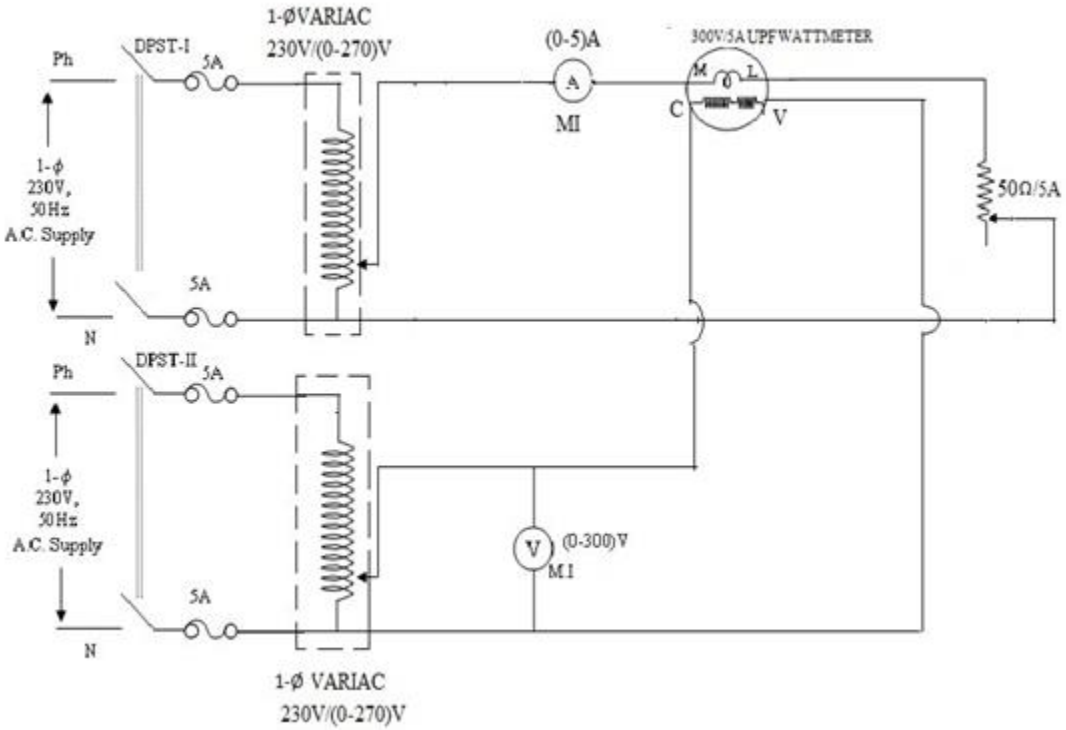

Fig: Calibration of Dynamometer UPF Wattmeter using Phantom Loading

4. THEORY:

When the current rating of a meter under test is high a test with actual loading arrangements would involve a considerable waste of power. In order to avoid this "Phantom" or Fictitious" loading is done.

Phantom loading consists of supplying the pressure circuit from a circuit of required normal voltage, and the current from a separate low voltage supply as the impedance of this circuit very low. With this arrangement the total power supplied for the test is that due to the small pressure coil current at normal voltage, plus that due to the current circuit current supplied at low voltage. The total power, therefore, required for testing the meter with phantom loading is comparatively very small.

An electrodynamometer wattmeter consists of two fixed coils, FA and FB and a moving coil M as shown below.

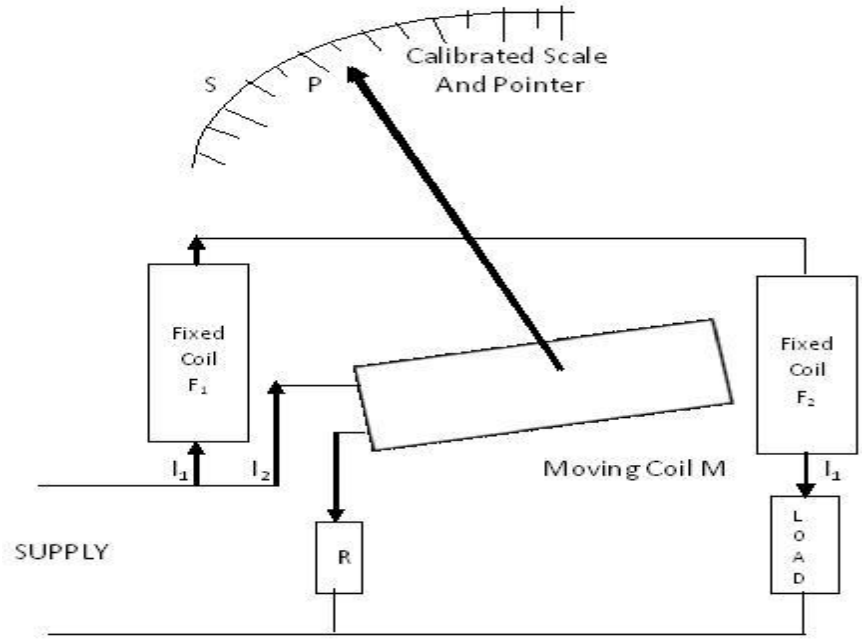

The fixed coils are connected in series with the load and hence carry the load current. These fixed coils form the current coil of the wattmeter. The moving coil is connected across the load and hence carries a current proportional to the voltage across the load. A highly non-inductive resistance R is put in series with the moving coil to limit the current to a small value. The moving coil forms the potential coil of the wattmeter.

The fixed coils are wound with heavy wire of minimum number of turns. The fixed coils embrace the moving coil. Spring control is used for movement and damping is by air. The deflecting torque is proportional to the product of the currents in the two coils. Theses watt meters can be used for both DC and AC measurements. Since the deflection is proportional to the average power and the spring control torque is proportional to the deflection, the scale is uniform. The meter is free from waveform errors. However, they are more expensive.

5. PROCEDURE:

1. Connect the circuit as per the circuit diagram.
2. Keep the single phase variac (I & II) in minimum (or) zero volt position.
3. Switch on the single phase power supply.
4. Now gradually vary the variac 'II' up to the rated position (230V) without varying the variac 'I'.
5. Then vary the variac 'I' for different current readings up to the rated current (5A) and note down the readings of ammeter, voltmeter and wattmeter.
6. After taking the readings, adjust the variac 'I' and 'II' to its minimum (or) zero volt position.
7. Finally switch off the single phase power supply.
8. Calculate the percentage error.

6. PRECAUTIONS:

1. Avoid loose connections.
2. Take readings without the parallax error.

7. OBSERVATION TABLE:

S. No	Supply Voltage (V) Volts	Load Current (I) Amps	Wattmeter (W)Watts	True Power	% Error
1	230	1	144	50	1.88%
2	230	2	232	200	0.16
3	230	2.5	288	312.5	0.0784
4	230	3	344	450	0.235
5	230	3.5	400	612.5	0.3469
6	230	4	440	800	0.45

8. MODEL GRAPH:

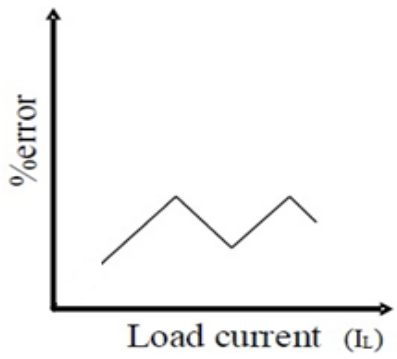

9. MODEL CALCULATIONS:

True Value = 50

Practical Value= Wattmeter Reading=144Watts

%Error = [(True Value-Practical Value)/True Value]*100= (144-50)/50= 1.88%

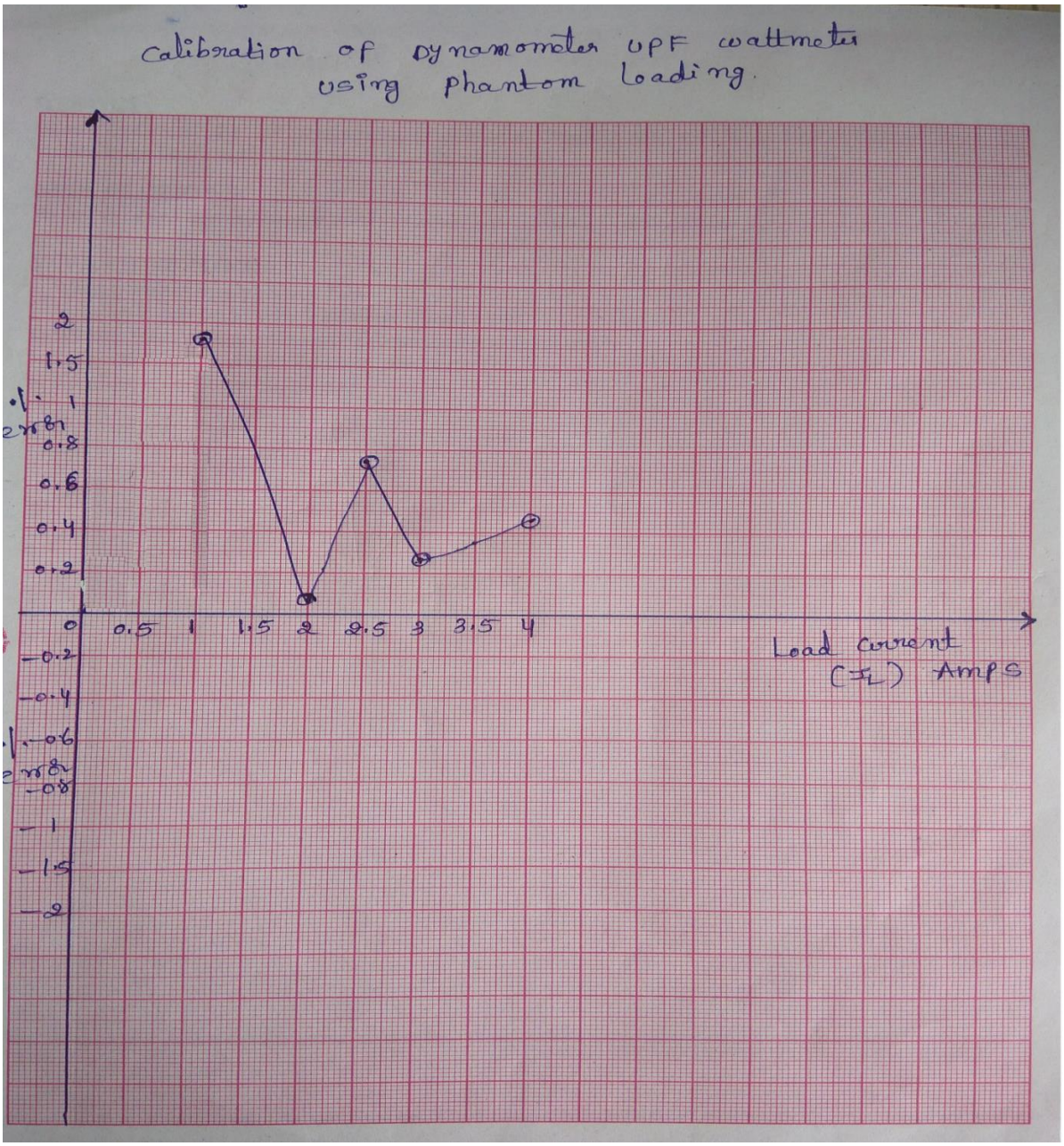

10. RESULT:

The calibration of UPF wattmeter by phantom loading test is done and the corresponding %Error, %Correction factor at different loads are calculated and the graph is plotted.

11. OUTCOME:

By conducting this experiment CO1, CO3, PO1, PO2, PO3, PO4, PO9, PO12 are attained.

12. APPLICATIONS:

1. It is used to test the energy meter to avoid power wastage while testing.

13. VIVA QUESTIONS:

1. What is meant by correction factor?
2. Is the load current in UPF wattmeter is high / low?
3. What is the difference between moving coil and fixed coil?
5. State a few errors in dynamometer wattmeter?
6. Applications of UPF wattmeter?

7. MEASUREMENT OF 3-PHASE POWER WITH SINGLE WATTMETER AND 2 NO'S OF C.T

1. AIM:

To measure the 3- Phase power with single wattmeter and 2 No's of C.T.

2. APPARATUS:

S. No	Name of The Experiment	Type	Range	Quantity
1	Three Phase Variac	AC	415V/(0-470)V, 15A	1
2	Wattmeter	UPF	600V,10A	1
3	Voltmeter	MI	(0-600)V	1
4	Ammeter	MI	(0-10)A	2
5	Current Transformer	-	1:1,5/5A	2
6	Three Phase Load	Resistive Load	15A	1
7	Connecting Wires	-	-	As Per Requirement

3. CIRCUIT DIAGRAM:

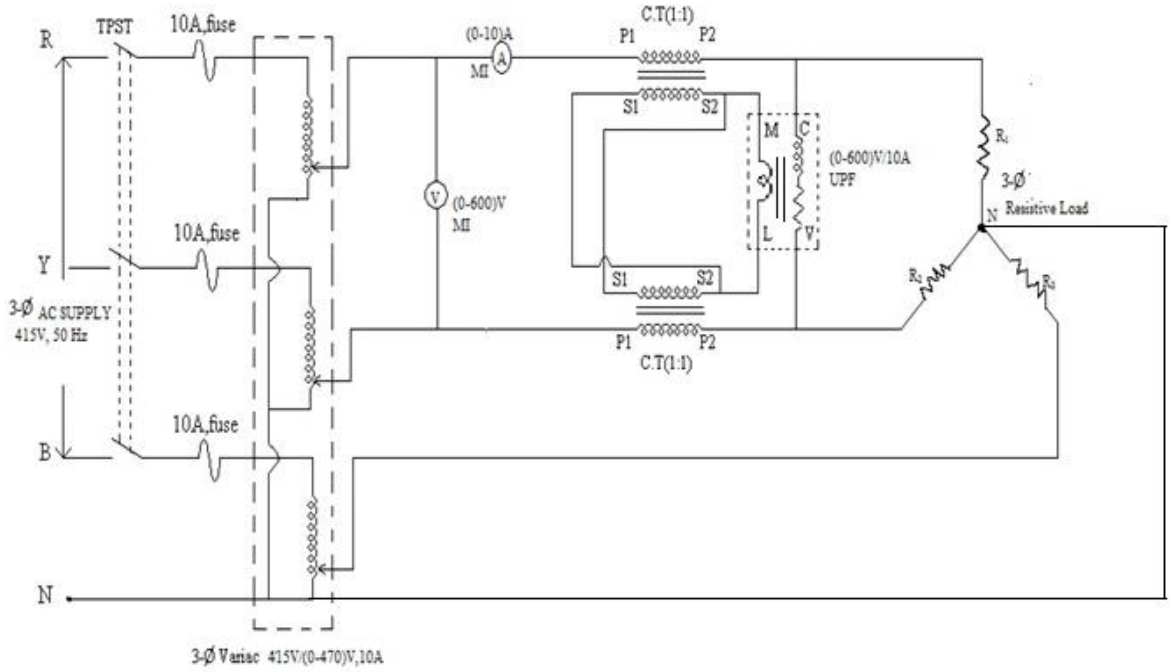

Fig: Measurement of 3-phase power with single Wattmeter & 2No's C.T

4. THEORY:

To measure 3- phase power using two CT's. Power can be measured in many ways, for an balanced load only one wattmeter is enough to measure the 3- phase power, and for an unbalanced load, two wattmeter method is used to measure the 3- phase power. The primary windings of CT's are connected in series with two phases. The secondary of both the CT's are connected as shown in figure the current coil of wattmeter connected across both secondaries of CT's. The pressure coil is connected between the two phases.

5. PROCEDURE:

1. Connect the circuit as per the circuit diagram.
2. Keep the three phase autotransformer at minimum or zero volt position.
3. Switch on the three phase power supply.
4. Vary the three phase variac slowly to its rated voltage (415V) and then apply the load in steps for different values and take the readings of the ammeter, voltmeter and wattmeter.
5. Now switch of the loads and adjust the variac to its previous (zero volt) position.
6. Switch off the three phase power supply.

5.1 FOR BALANCED CONDITION:

To check the balance condition, apply the two phase loads simultaneously and note down the two ammeter readings then it should show the same value.

6. PRECAUTIONS:

1. Avoid loose connections.
2. The secondary of CT should not be kept open.
3. Take readings without error.

7. OBSERVATION TABLE:

7.1 FOR UNBALANCED CONDITION:

S. No	Supply Voltage (V_L)Volts	Current (I_R)Amps	Current (I_Y)Amps	Power (W)Watts
1	385	0.5	0	160
2	385	0.4	0	400
3	385	2.2	0	600
4	385	2.9	0	800
5	385	0	0.5	200
6	385	0	1.5	400
7	385	0	2.2	600
8	385	0	3	800

7.2 FOR BALANCED CONDITION:

S. No	Supply Voltage (V_L)Volts	Current (I_R)Amps	Current (I_Y)Amps	Power (W)Watts
1	385	0.5	0.5	400
2	385	1.5	1.5	800
3	385	2.2	2.2	1360
4	385	2.9	2.9	1760
5	385	3.65	3.65	2320

8. MODEL CALCULATIONS:

Three phase power is, $P = 3(VI\cos\Phi) = 400$ watts

9. RESULT:

Three phase active power (P= 400 W) is calculated using single phase wattmeter and two CT's method at balanced and unbalanced load conditions.

10. OUTCOME:

By conducting this experiment CO1, CO2, PO1, PO2, PO3, PO4, PO9, PO12 are attained.

11. VIVA QUESTIONS:

1. What is Burden of transformer?
2. Define (C.T&P.T) A. Transformation ratio
   B. Turns ratio
   C .Nominal ratio
   D .RCF
3. Why C.T secondary should not be opened?
4. Comparison between C.T & P.T

8. MEASUREMENT OF PARAMETERS OF CHOKE COIL USING 3-VOLTMETER AND 3-AMMETER METHODS

1. AIM:

To obtain the parameters (R, Z, L, X_L) of given choke coil using 3-Voltmeter and 3-Ammeter methods.

2. APPARATUS:

S. No	Name of The Equipment	Type	Range	Quantity
1	Single Phase Variac	AC	230V/(0-270)V,10A	1
2	Ammeter	MI	(0-500) mA	1
3	Ammeter	MI	(0-1)A	1
4	Ammeter	MI	(0-2)A	1
5	Voltmeter	MI	(0-300)V	3
6	Ammeter	MI	(0-5)A	1
7	Rheostat	WW	110Ω/5A	1
8	Choke Coil	-	0.4A, 40W, Cosϕ = 0.5, 240V	1
9	Connecting Wires	-	-	As Per Requirement

3. CIRCUIT DIAGRAM:

3.1. 3-VOLTMETER METHOD:

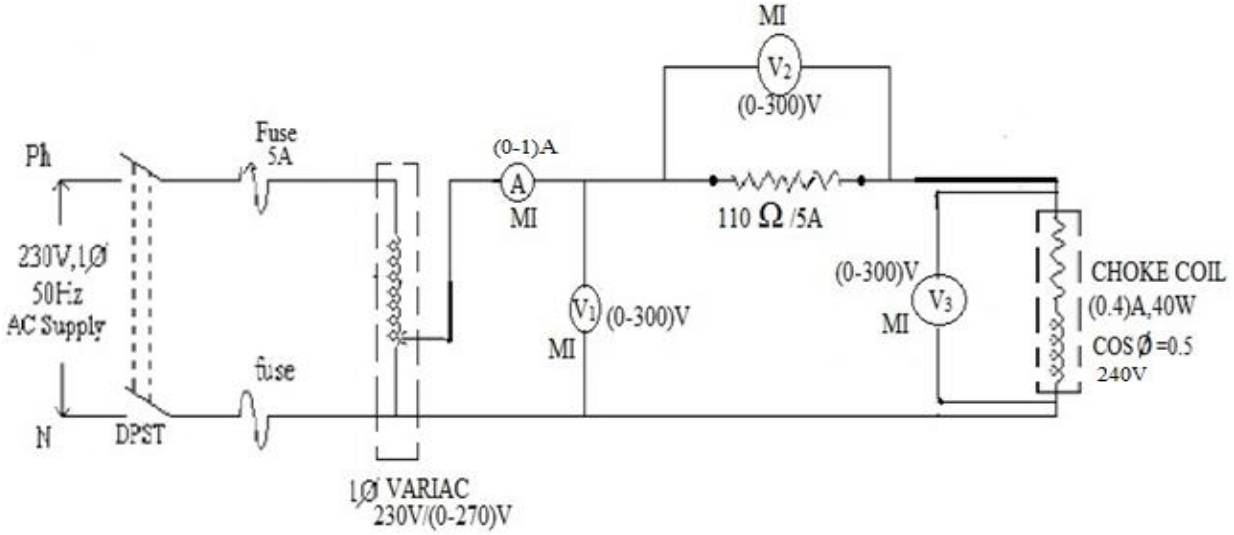

Fig: 3-Voltmeter Method

3.2. 3-AMMETER METHOD:

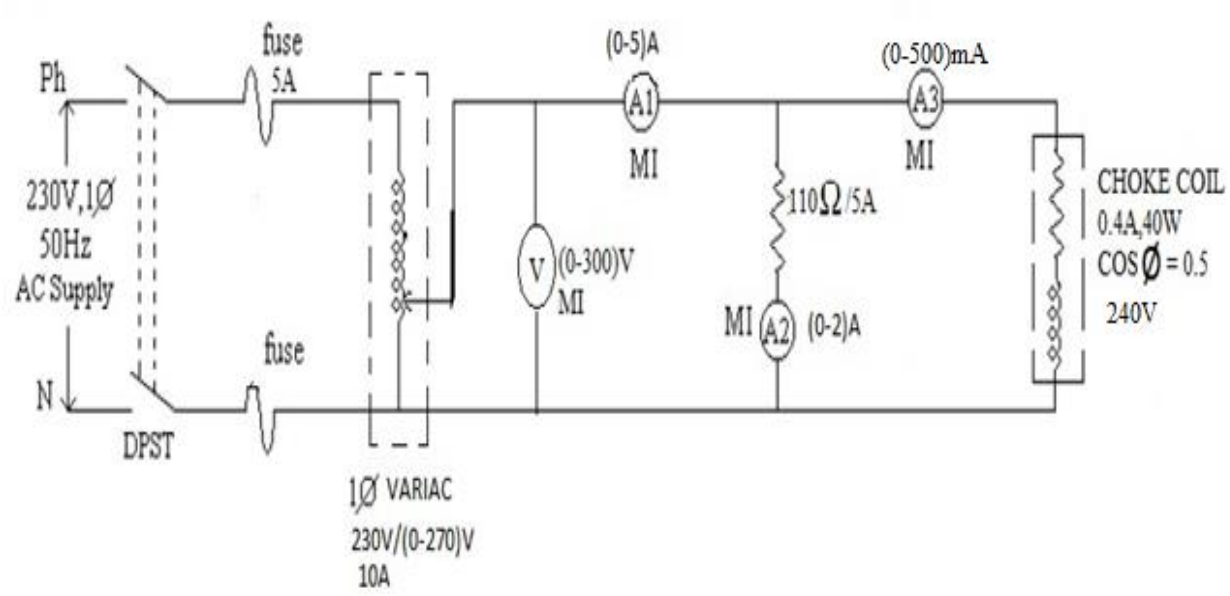

Fig: 3-Ammeter method

4. THEORY:

An inductive transducer works on the principle of variation of inductance using multiple coils. The coils that are being used need to be evaluated and their parameters so defined such that the use of their parameters may be regarded as constant and accurate.

Thus emphasis needs to be laid upon the method of measurement of inductance of choke coil by using 3voltmeter meter method and 3 ammeter methods.

Hence by using the known formulae we can calculate the inductance of a choke coil.

5. PROCEDURE:

5.1 FOR 3-VOLTMETER METHOD:

1. Connect the circuit as per the circuit diagram.
2. Keep the variac at minimum (or) zero volt position.
3. Now switch on the power supply.
4. Gradually vary the variac at different voltages up to rated voltage of choke coil and simultaneously note down the readings of the ammeter and three voltmeters.
5. Then adjust the variac to its minimum position.
6. Switch off the power supply.
7. Calculate the parameters of choke coil by the known formulae.

5.2 PROCEDURE FOR 3 AMMETER METHOD:

1. Connect the circuit as per the circuit diagram.
2. Keep the variac at minimum (or) zero volt position.
3. Now switch on the power supply.
4. Gradually vary the variac at different voltages up to rated current of choke coil and simultaneously take the reading of the voltmeter and three ammeters.
5. Then adjust the variac to its minimum position.
6. Switch off the power supply.
7. Calculate the parameters of choke coil by the known formulae.

6. PRECAUTIONS:

1. Avoid loose connections.
2. Take readings without the parallax error

7. OBSERVATION TABLE:

7.1 FOR 3 VOLTMETER METHOD:

S. No	V_1 Volts	I Amps	V_2 Volts	V_3 Volts	Cos ϕ	R(Ω)	Z(Ω)	X_l(Ω)	L(H)
1	100	0.15	18	92	0.3659	224.41	613.33	570.79	1.816
2	180	0.27	35.5	164	0.3644	221.339	607.47	565.64	1.8
3	240	0.43	49.5	216	0.3972	199.523	502.32	460.99	1.467

Average Inductance = 1.694 H
Average Resistance = 215.09 **Ω**

7.2 FOR 3 AMMETER METHOD:

S. No	V Volts	I_1 Amps	I_2 Amps	I_3 Amps	Cos Φ	R(Ω)	Z(Ω)	X_L(Ω)	L(H)
1	50	0.05	100	0.2	0.6816	500	340.8	365.86	1.16
2	92	0.15	200	0.5	0.9375	460	431.25	160.07	0.509
3	140	0.25	300	0.96	0.7691	466.6	358.9	298.25	0.944

Average Inductance = 0.871 H
Average Resistance = 475.5 **Ω**

8. MODEL CALCULATIONS:

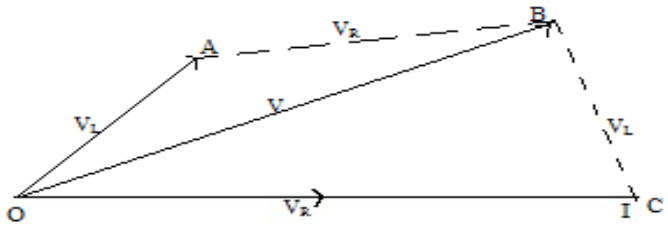

From the Phasor diagram,

Let $V_1=V$, $V_2= V_R$, $V_3=V_l$ and

We can write the Equation as

$(OB)^2 = (OA)^2 + (AB)^2 + 2(OA)(AB)COS\emptyset$

$V^2= (V_L)^2 + (V_R)^2 + 2V_LV_RCOS\emptyset$ ---------- 1

$V^2 – (V_L)^2 – (V_R)^2= 2V_LV_RCOS\emptyset$

$COS\emptyset = (V^2 – V_L^2 – V_R^{2)}/2V_LV_R$

The above equation is for the COSØ.

From the equation 1, we can write as

$V^2= (V_L)^2 + (V_R)^2 + 2V_LIRCOS\emptyset$

$V^2= (V_L)^2 + (V_R)^2 + 2PR$

$V^2 - (V_L)^2 - (V_R)^2= 2PR$

$P= V2 - (V_L)^2 - (V_R)^2/2R$

Similarly for the ammeter method, we can find the terms in I.

9. RESULT:

By conducting 3-voltmeter and 3-ammeter method, the obtained parameters of choke coil are R=215.09 **Ω**, L= 1.694 H and R=475.5 **Ω,** L= 0.871 H respectively.

10. OUTCOME:

By conducting this experiment CO1, CO5, PO1, PO2, PO3, PO4, PO9, PO12 are attained.

11. APPLICATIONS:

1. A choke is an inductor used to block higher-frequency alternating current (AC) in an electrical circuit, while passing lower-frequency or direct current (DC).
2. In fluorescent lamp circuit, Ac power pass through a 'choke' or 'reactor', this limits current and prevents the lamp from creating a type of short circuit which would destroy the lamp. All arc discharge lamps need a choke to limit current.
3. Choke practically produces enough voltage (for a very small time) to create a discharge between anode and cathode.

12. VIVA QUESTIONS:

1. What are the choke coil parameters?
2. What is the function of choke?
3. What are the methods are there to find choke coil parameters?
4. Which method is very important for finding the choke coil parameters?
5. What are the disadvantages of 3-voltmeter and 3-ammeter method?

9. MEASUREMENT OF POWER BY 3-VOLTMETER AND 3-AMMETER METHODS

1. AIM:

To measure the Power by using 3-Voltmeter and 3-Ammeter method.

2. APPARATUS:

S. No	Name of The Equipment	Type	Range	Quantity
1	Single Phase Variac	AC	230V/(0-270)V,10A	1
2	Ammeter	MI	(0-500)mA	1
3	Ammeter	MI	(0-1)A	1
4	Ammeter	MI	(0-2)A	1
5	Voltmeter	MI	(0-300)V	3
6	Ammeter	MI	(0-5)A	1
7	Rheostat	WW	110Ω/5A	1
8	Choke Coil	-	0.4A, 40W, Cosϕ = 0.5, 240V	1
9	Connecting Wires	-	-	As Per Requirement

3. CIRCUIT DIAGRAM:

3.1 3-VOLTMETER METHOD:

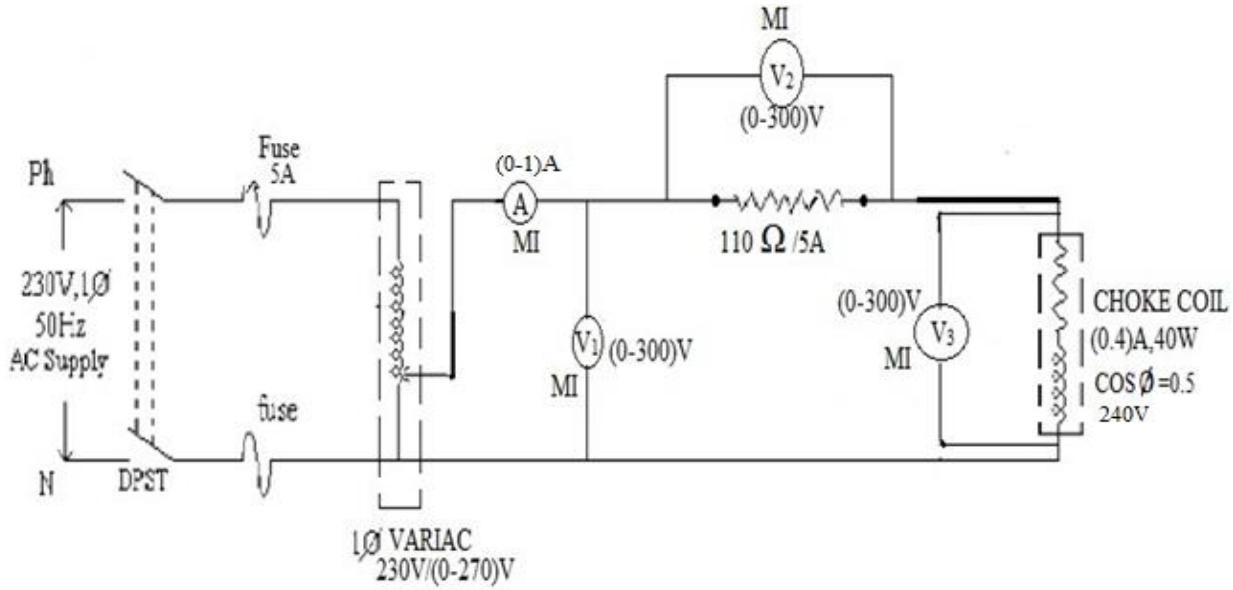

Fig: 3-Voltmeter Method

3.2. 3-AMMETER METHOD:

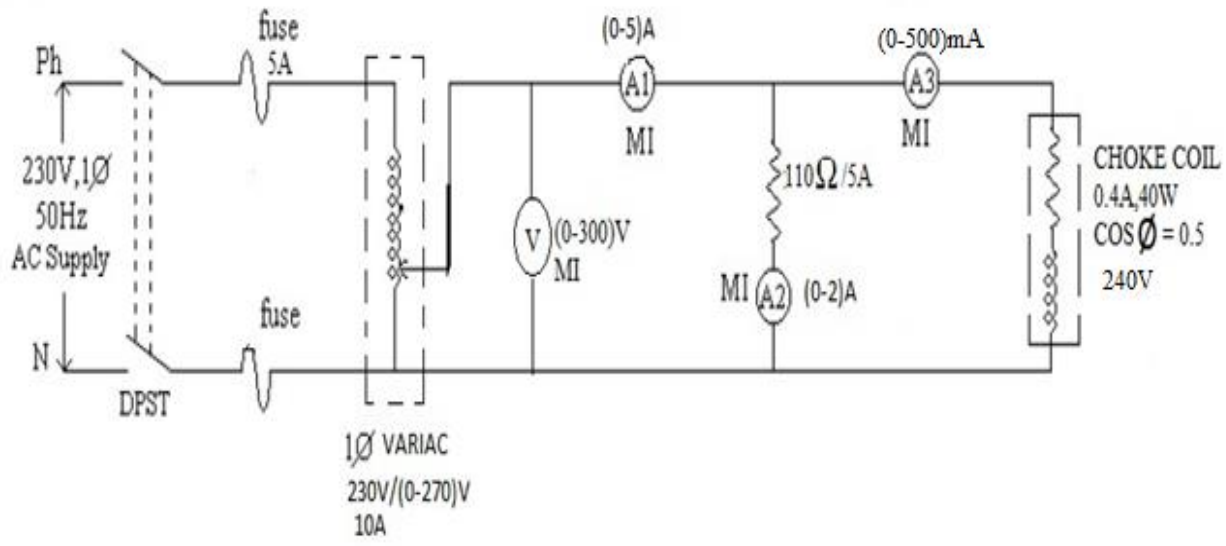

Fig: 3-AmmeterMethod

4. THEORY:

An inductive transducer works on the principle of variation of inductance using multiple coils. The coils that are being used need to be evaluated and their parameters so defined such that the use of their parameters may be regarded as constant and accurate.

Thus emphasis needs to be laid upon the method of measurement of inductance of choke coil by using 3voltmeter meter method and 3 ammeter methods.

Hence by using the known formulae we can calculate the inductance of a choke coil.

5. PROCEDURE:

5.1 FOR 3VOLTMETER METHOD:

1. Connect the circuit as per the circuit diagram.
2. Keep the variac at minimum (or) zero volt position.
3. Now switch on the power supply.
4. Gradually vary the variac at different voltages up to rated voltage of choke coil and Simultaneously note down the readings of the ammeter and three voltmeters.
5. Then adjust the variac to its minimum position.
6. Switch off the power supply.
7. Calculate the power of choke coil by the known formulae.

5.2 PROCEDURE FOR 3 AMMETER METHOD:

1. Connect the circuit as per the circuit diagram.
2. Keep the variac at minimum (or) zero volt position.
3. Now switch on the power supply.
4. Gradually vary the variac at different voltages up to rated current of choke coil and simultaneously take the reading of the voltmeter and three ammeters.
5. Then adjust the variac to its minimum position.
6. Switch off the power supply.
7. Calculate the power of choke coil by the known formulae.

6. PRECAUTIONS:

1. Avoid loose connections.
2. Take readings without the parallax error.

7. TABULAR FORM:

7.1 FOR 3-VOLTMETER METHOD:

S. No	V_1 Volts	I Amps	V_2 Volts	V_3 Volts	Cos Φ	R (Ω)	Power Watts
1	100	0.15	18	92	0.3659	224.41	2.7
2	180	0.27	35.5	164	0.3644	221.33	4.79
3	240	0.43	49.5	216	0.3972	199.52	10.64

7.2 FOR 3 AMMETER METHOD:

S. No	V Volts	I_1 Amps	I_2 Amps	I_3 m Amps	Cos Φ	R(Ω)	Power (P) Watts
1	50	0.05	0.2	100	0.68	340.8	8.095
2	92	0.15	0.5	200	0.93	431.25	57.679
3	140	0.25	0.96	300	0.76	358.908	170.31

8. MODEL CALCULATIONS:

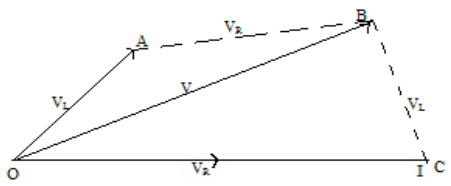

From the Phasor diagram,

We can write the Equation as

$(OB)^2 = (OA)^2 + (AB)^2 + 2(OA)(AB)COS\emptyset$

$V^2 = (V_L)^2 + (V_R)^2 + 2V_LV_RCOS\emptyset$ ---------- 1

$V^2 - (V_L)^2 - (V_R)^2 = 2V_LV_RCOS\emptyset$

$COS\emptyset = V^2 - V_L^2 - V_R^2/2V_LV_R$

The above equation is for the COSØ.

From the equation 1, we can write as

$V^2 = (V_L)^2 + (V_R)^2 + 2V_LIRCOS\emptyset$

$V^2 = (V_L)^2 + (V_R)^2 + 2PR$

$V^2 - (V_L)^2 - (V_R)^2 = 2PR$

$P = V^2 - (V_L)^2 - (V_R)^2/2R$

Similarly for the ammeter method, we can find the terms in I.

9. RESULT:

Hence calculated the Power = 8.095 Watts and 2.7 Watts by using 3-Voltmeter and 3- Ammeter method respectively.

10. OUTCOME:

By conducting this experiment CO1, CO5, PO1, PO2, PO3, PO4, PO9, PO12 are attained.

11. APPLICATIONS:

1. A choke is an inductor used to block higher-frequency alternating current (AC) in an electrical circuit, while passing lower-frequency or direct current (DC).
2. In fluorescent lamp circuit, Ac power pass through a 'choke' or 'reactor', this limits current and prevents the lamp from creating a type of short circuit which would destroy the lamp. All arc discharge lamps need a choke to limit current.
3. Choke practically produces enough voltage (for a very small time) to create a discharge between anode and cathode.

12. VIVA QUESTIONS:

1. What is the function of choke?
2. If we connect the voltmeter in series with the load what will happen?
3. If an ammeter is connected across the A.C line what will happen?

10. CALIBRATION OF PMMC AMMETER AND VOLTMETER USING D.C CROMPTON POTENTIOMETER

1. AIM:

To Calibrate PMMC Ammeter and Voltmeter using DC Crompton potentiometer

2. APPARATUS:

S. No	Name of The Equipment	Type	Range	Quantity
1	DC Crompton potentiometer	DC	-	1
2	Standard Cell	DC	1.0186V	1
3	Volt Ratio Box	-	Output 0-1.5V Input 0-1.5, 15, 30,100,300V	1
4	Regulated power supply(RPS)	DC	(0-30)V	1
5	Ammeter	MC	(0-2)A	1
6	Voltmeter	MC	(0-300)V	1
7	Sensitive galvanometer	Spot reflecting MC type	30-0-30	1
8	Standard resistance		0.1Ω,10A	1
9	Rheostat		50Ω,5A	1
10	Battery		2V	1
11	DC Supply		220V	1
12	Connecting Wires			As Per Requirement

3. CIRCUIT DIAGRAM:

3.1 CALIBRATION OF VOLTMETER:

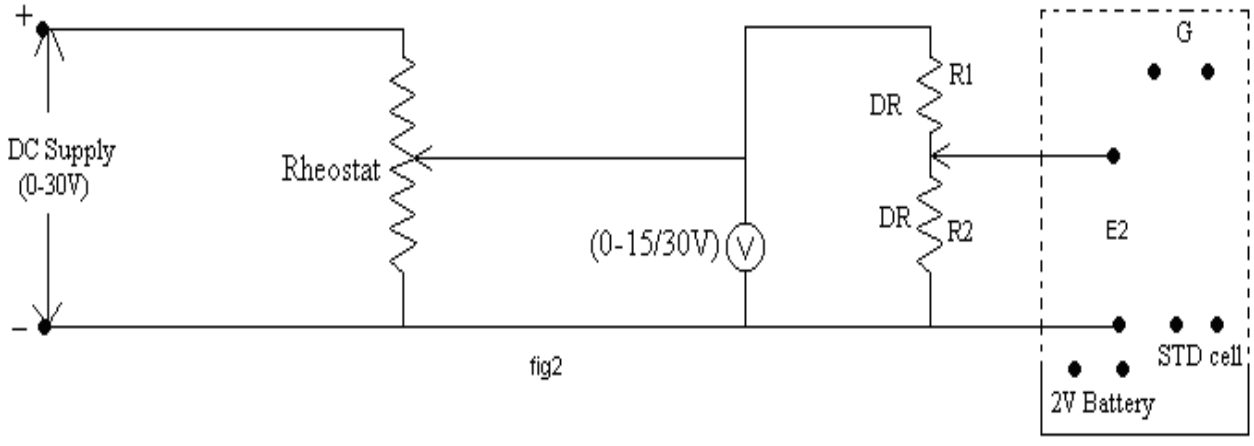

Fig: Calibration of Voltmeter

3.2 CALIBRATION OF AMMETER:

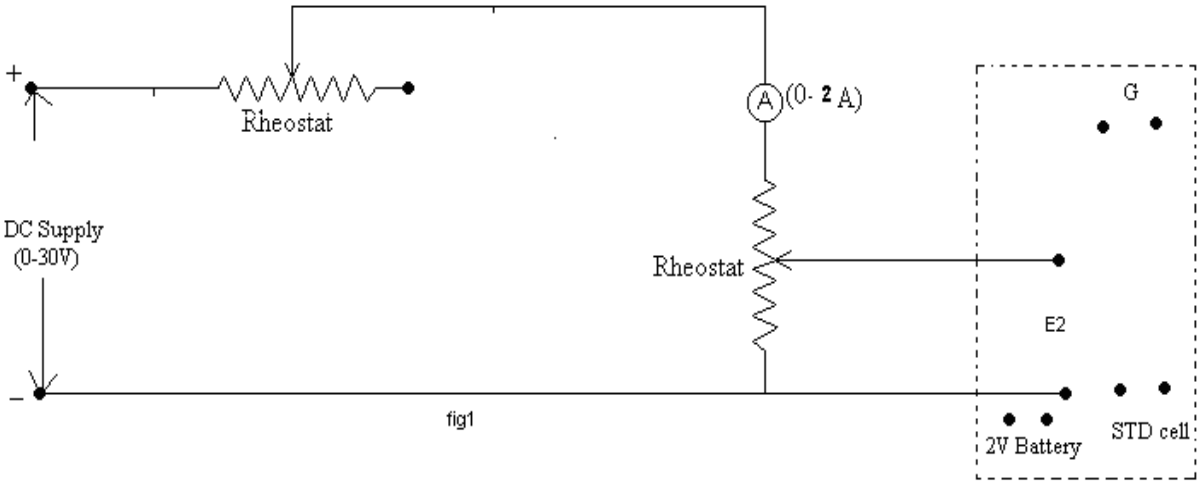

Fig: Calibration of Ammeter

4. THEORY:

A Potentiometer is an instrument designed to measure an unknown voltage by comparing it with unknown voltage. The known voltage may be supplied by a standard cell or any other known voltage –reference source. Measurements using comparison methods are capable of a high degree of accuracy because the result obtained does not depend upon on the actual deflection of a pointer, as is the case in deflection methods, but only upon the accuracy with which the voltage of the reference source is known. Another advantage of the potentiometers is that since a potentiometer makes use of a balance or null condition, no current flows and hence no power is consumed in the circuit containing the unknown emf when the instrument is balanced. Thus the determination of voltage by a potentiometer is quite independent of the source resistance.

It can also be used to determine current simply by measuring the voltage drop produced by the unknown current passing through a known standard resistance. The potentiometer is extensively used for a calibration of voltmeters and ammeters and has in fact become the standard for the calibration of these instruments. For the above mentioned advantages the potentiometer has become very important in the field of electrical measurements and calibration.

Modern laboratory type potentiometers used calibrated dial resistors and a small circular wire of one or more turns, thereby reducing the size of the instrument. The resistance of slide wire is known accurately the voltage drop along the slide wire can be controlled by adjusting the value of working current. The process of adjusting the working current so as to match the voltage drop across a portion of sliding wire against a standard reference source is known as "Standardization".

5. PROCEDURE:

5.1 STANDARDIZATION:

1. Connections are made as per the circuit diagram.
2. Keep the function knob of the potentiometer at STD position. Switch on the 2V Supply
3. Adjust the main dial and slide wire of the potentiometer to read standard cell voltage (1.0186V).
4. Press the galvano key of the potentiometer and adjust the coarse and fine rheostats until the galvanometer gives null deflection. This completes standardization of the Potentiometer. Once standardization is done the position of R_1 (coarse rheostat) & R_2 (fine rheostat) should not be changed.

5.2 CALIBRATION:

5.2.1 PMMC VOLTMETER:

1. Voltmeter under test is connected across potential divider in such a way that p.d across Voltmeter can be varied.
2. V.R box is used in parallel to potentiometer to reduce voltage to the range of potentiometer
3. Change the function knob to E1 position. Switch on RPS and adjust a suitable voltage on Voltage Ratio Box.
4. Press the galvano key of the potentiometer and adjust the slide contact and slide wire until the Spot reflecting galvanometer gives null deflection.
5. Note down the readings of voltmeter, and potentiometer slide contact and slide wire readings.
6. Repeat the steps 4 and 5 for different voltages from RPS
7. Reduce the voltage of RPS and RPS to zero. Switch off the supply.
8. Draw the graph between Load current (vs) % Error.

5.2.2 PMMC AMMETER:

1. Ammeter to be calibrated is connected in series with variable resistor R & standard resistance S.
2. The standard resistance should of such a magnitude that current passed through it doesn't exceed range of potentiometer.
3. V.R box is used in parallel to potentiometer to reduce voltage to the range of potentiometer
4. Keep the rheostat at maximum position and change the function knob to E1 position. Switch ON RPS2) and apply 30 volts.
5. Vary the rheostat gradually and adjust suitable current.
6. Press the galvano key on the potentiometer and adjust the slide contact and slide wire until the spot reflecting galvanometer gives the null deflection.

7. Note down the readings of ammeter, voltmeter, and potentiometer slide contact and slide wire readings.
8. Repeat the steps 5 to7 for different values of current.
9. Vary the rheostat to maximum position, reduce the voltage of RPS and RPS to zero. Switch off the supply.
10. Draw the graph between Load current (vs) % Error.

6. PRECAUTIONS:

1. Connect the circuit without loose connections.
2. Don't vary the coarse and fine pots, after standardization.

7. OBSERVATION TABLE:

7.1 FOR VOLTMETER:

S. No	Voltmeter reading(V) , V_{True}	Volt ratio box	V_{act}=(Coarse +Fine)*E2	% Error
1	15	15/1.5=10	14.71	1.93%

7.2 FOR AMMETER:

S. No	Ammeter Reading(A), I_{True}	E_2 Value(V)	I_{act} = E/R	% Error
1	1	95 mv	9.5	5.26%

8. MODEL CALCULATIONS:

8.1 VOLTMETER CALCULATION:

Calibration of voltmeter:

V–R Box ratio = output voltage / input voltage= 15/1.5=10

V_{True} = Voltmeter reading= 15

V_{Act} = Reading obtained from potentiometer

= [Coarse voltage + Fine voltage] x Ratio of volt-ratio box= $[1.25+221*10^{-3}]*10=14.71V$

%Error = [(True value – Practical value) / (True Value)] * 100= (15-14.71/15)*100= 1.93%

8.2 AMMETER CALCULATION:

I_{True}=Ammeter reading= 1A

I_{Act}= $(Coarsevolt + Finevolt) * RatioofVoltRatiobox \Big/ Standard\ Resistance$ =9.5

%Error = [(True value – Practical value) / (True Value)] * 100= 5.26%

9. RESULT:

Hence the calibration of PMMC Voltmeter and Ammeter is done using DC Crompton potentiometer and also calculated the %Error = 1.93% and the corresponding %Correction factor is -1.93% and 5.26%.

10. OUTCOME:

By conducting this experiment CO1, CO5, PO1, PO2, PO3, PO4, PO9, PO12 are attained.

11. APPLICATIONS:

1. Calibration of voltmeter and Ammeter.
2. Measurement of resistance.
3. Calibration of Wattmeter.
4. Measurement of unknown E.M.F.

12. VIVA QUESTIONS:

1. What do you mean by a potentiometer?
2. What are the types of potentiometer?
3. What is the working principle of a potentiometer?
4. What is standardization of potentiometer?
5. What is the purpose of connecting a standard battery in the circuit?
6. Application of dc potentiometer?
7. What do you mean by calibration curve of the ammeter?
8. What do you mean by a volt-ratio box?

EXPERIMENTS BEYOND CURRICULUM

1. CALIBRATION OF DYNAMOMETER TYPE POWER FACTOR METER

1. AIM:

To test and calibrate the given single phase electrodynamometer type power factor meter.

2. APPARATUS:

S. No	Name of The Apparatus	Range	Type	Quantity
1.	Voltmeter	(0-300)V	MI	1
2	Ammeter	(0-10)A	MI	1
3	Power factor meter	75/150/300V, 5A	Dynamo	1
4	Auto transformer	230V/(0-270), 10A	Single phase	1
5	Rheostat	110ohm/5A	WW	1
6	Wattmeter	300V,10A	UPF	1
7	Inductive load	0-50mH/5A	--	1
8	Connecting wires	--	--	As per Requirement

3. CIRCUIT DIAGRAM:

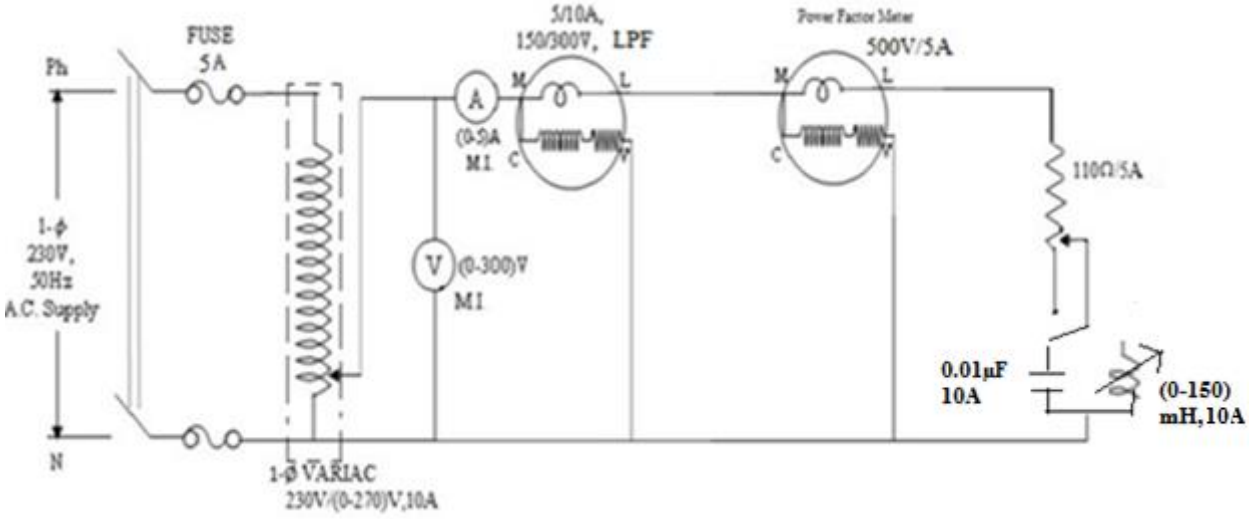

Fig: Calibration of Dynamometer type power factor meter

4. THEORY:

It consists of the fixed coil which acts as a current coil. This coil is split up into two parts and carries the current of the circuit under test. Therefore the magnetic field produced by this coil is proportional to the main current. Two identical pressure coils A and Coil B pivoted on a spindle constitute the moving system.

Pressure coil A has non-inductive resistance connected in series with coil B has a highly inductive coil L connected in series with it . These two coils are connected across voltage circuit the values 'R' and 'L' are so adjusted that the two coils carry some values of current at normal frequency.

5. PROCEDURE:

1. Connections are made as per the circuit diagram
2. Initially capacitive load is considered and it is connected in series with the resistive load.
3. Supply is given by closing DPST switch.
4. Vary the Capacitive load up to 4 Amp.
5. Note down the values of Voltmeter, Ammeter, Wattmeter, Power factor meter.
6. After taking the readings remove the capacitive load and connect the inductive load in series with the resistive load.
7. Now vary the inductive load and note down the readings of Voltmeter, Ammeter, Wattmeter, Power factor meter.
8. Calculations are made and graph is plotted between load current (I_a) and percentage error.

6. PRECAUTIONS:

1. Avoid loose connections.
2. Take the readings without parallax errors.

7. OBSERVATION TABLE:

Type of load	Supply voltage (V) volts	Load current (I) Amps	Power (w) watts	Power factor (cosΦ)	cosΦ Theoritical	% error
Leading	230 V	2.15	244	0.67	0.49	36.73
	230 V	2.85	424	0.77	0.647	19.01
	230 V	3.1	496	0.82	0.696	17.81
	230 V	3.25	576	0.85	0.77	10.39
Lagging	230 V	1.8	332	0.54	0.56	3.57
	230 V	2	276	0.52	0.6	13.33
	230 V	2.4	364	0.5	0.659	24.13
	230 V	2.8	464	0.5	0.72	30.55

8. MODEL GRAPH:

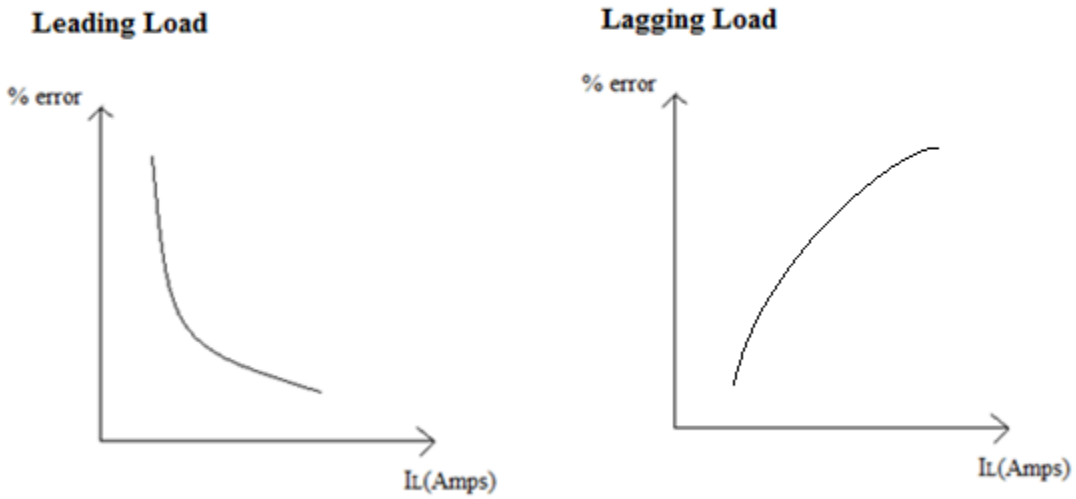

9. MODEL CALUCULATIONS:

$\cos\Phi = W/VI = 0.75$

% error= $\frac{Actual - Measured}{Measured} * 100 = (0.85 - 0.77)/0.77 = 10.39.$

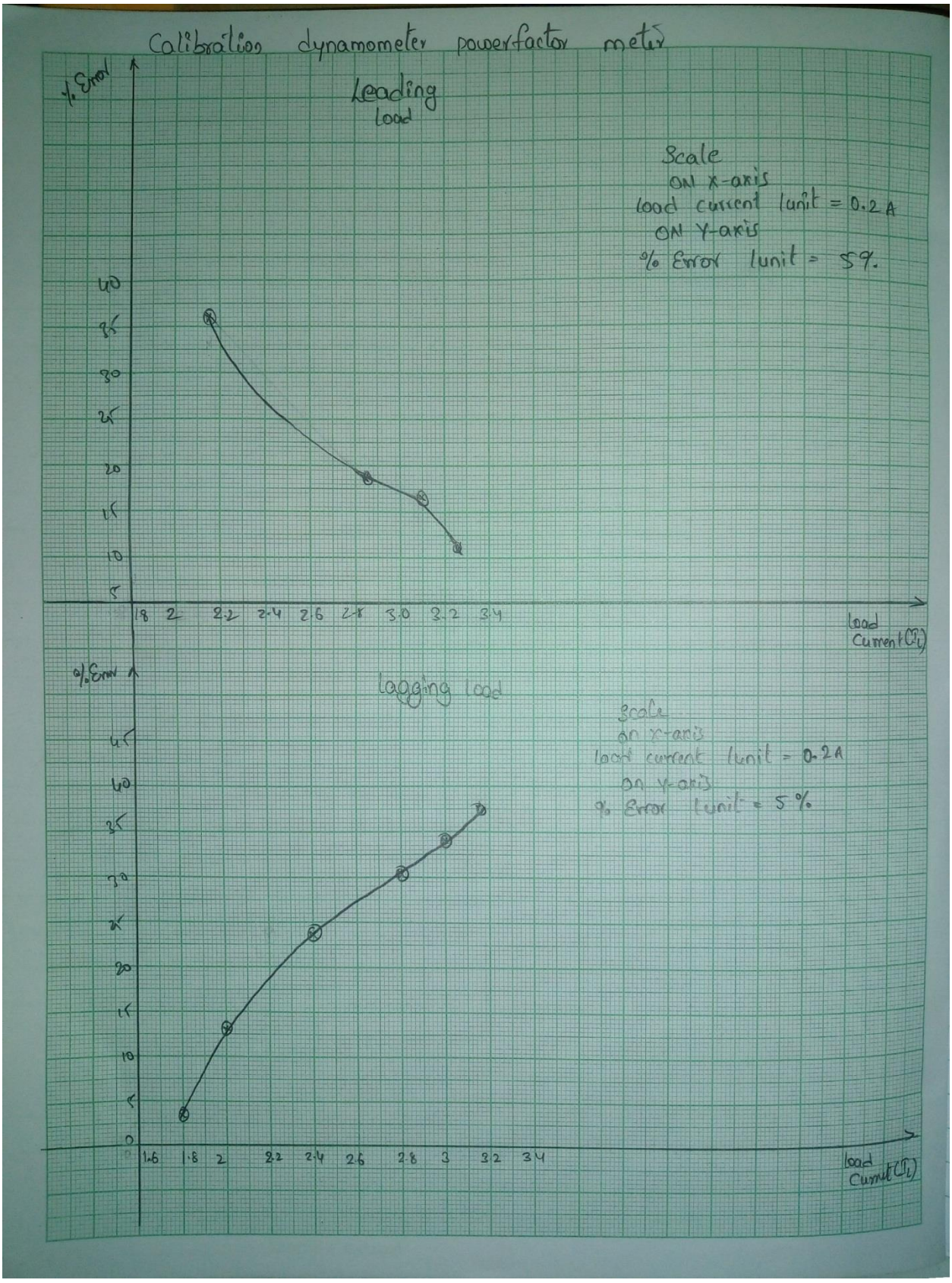
Calibration dynamometer powerfactor meter
% Error
Leading load
Scale
ON X-axis
load current 1unit = 0.2 A
ON Y-axis
% Error 1unit = 5%.
40
35
30
25
20
15
10
5
1.8 2 2.2 2.4 2.6 2.8 3.0 3.2 3.4
load Current(IL)
% Error
lagging load
Scale
on x-axis
load current 1unit = 0.2A
on y-axis
% Error 1unit = 5%
45
40
35
30
25
20
15
10
5
0
1.6 1.8 2 2.2 2.4 2.6 2.8 3 3.2 3.4
load Current(IL)

10. RESULT:

Hence the calibration of Electrodynamometer type Power factor meter is done and also calculated the %Error.

11. OUTCOME:

By conducting this experiment CO1, CO3, PO1, PO2, PO3, PO4, PO9, PO12 are attained

12. VIVA QUESTIONS:

1. How the power factor of a single phase circuit is measured?
2. What is principle of power factor meter?
3. What are the different types of power factor meters?
4. Why is moving iron power factor meter generally used?
5. Why is moving iron PF meters less accurate than dynamometer type?
6. What is power factor?
7. Give expression for the PF?
8. What is synchroscope and where it is used?
9. What is crossed coil PF meter?

2. MEASUREMENT OF RESISTANCE BY VOLTMETER - AMMETER METHOD

1. AIM:

To Measure resistance by volt-ampere method.

2. APPARATUS:

S. No	Name of The Equipment	Type	Range	Quantity
1	Regulated power supply(RPS)	DC	(0-30)V	1
2	Ammeter	MC	(0-3)A	1
3	Voltmeter	MC	(0-300)V	1
4	Rheostat	WW	110 Ohms/5A	1
5	Connecting Wires	--	--	As per requirement

3. CIRCUIT DIAGRAM:

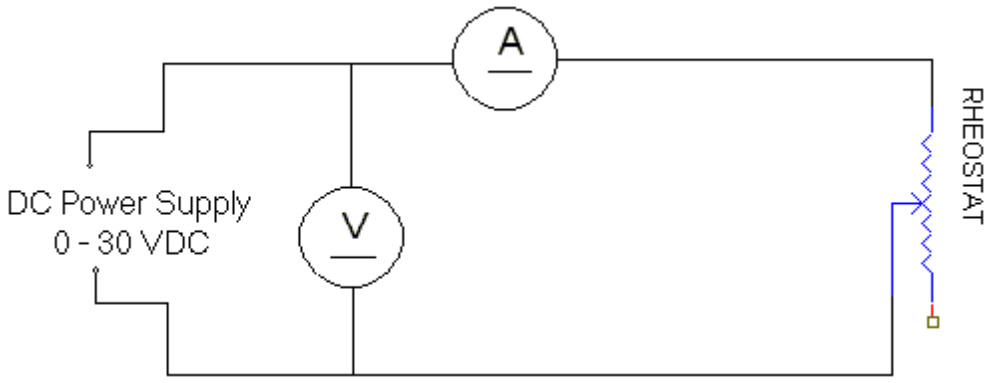

Fig: Voltmeter-Ammeter method

4. THEORY:

This method is very popular since the instruments require for this test are usually available in the laboratory. If readings of ammeter and voltmeter are taken then the measured value of the resistance is given by

$$R = \frac{\text{Voltmeter Reading}}{\text{Ammeter Reading}} = \frac{V}{I}$$

5. PROCEDURE:

1. Make connections as per the Circuit diagram shown below.
2. Switch on the power supply.
3. Set the resistance of the rheostat .
4. Increase the input voltage of the Power Supply.
5. Note down the Voltmeter, Ammeter readings for different voltages as per the tabular column.
6. Find out the average resistance.

6. PRECAUTIONS:

1. Avoid loose connections.
2. Take the readings without parallax errors.

7. OBSERVATION TABLE:

S. No.	Voltage (V) Volts	Current (I) mA	Resistance (R) Ohms R = V/I
1	1	8.2	121.9
2	3	22.3	134.5
3	4	28.8	138.8
4	5	36.8	135.8
5	7	51	137.2
6	8	57.3	139.6
7	10	71.5	139.8
8	12	88.2	136.05

Average value of resistance = 135.4 Ohms

8. RESULT:

The resistance is Measured by Voltmeter-Ammeter method.

9. OUTCOME:

By conducting this experiment CO1, PO1, PO2, PO3, PO4, PO9, PO12 are attained.